INCH-POUND
MIL-DTL-24653/6A(SH)
28 July 2020
SUPERSEDING
MIL-H-24653/6(SH)
30 May 1985

DETAIL SPECIFICATION SHEET

HASP, HIGH SECURITY, SHROUDED, FOR SHIPBOARD DOORS AND HATCHES USING HIGH SECURITY PADLOCK, STYLE 6

This specification sheet is approved for use by the Naval Sea Systems Command and is available for use by all Departments and Agencies of the Department of Defense.

The requirements for acquiring the product described herein shall consist of this specification sheet and MIL-DTL-24653.

REQUIREMENTS:

The configuration requirements applicable to a style 6 hasp shall conform to figure 1.

Installation instructions: Each hasp assembly shall be furnished with installation instructions as shown on figure 2.

AMSC N/A FSC 5340

DISTRIBUTION STATEMENT A. Approved for public release. Distribution is unlimited.

Source: http://assist.dla.mil -- Downloaded: 2021-02-01T23:34Z
Check the source to verify that this is the current version before use.

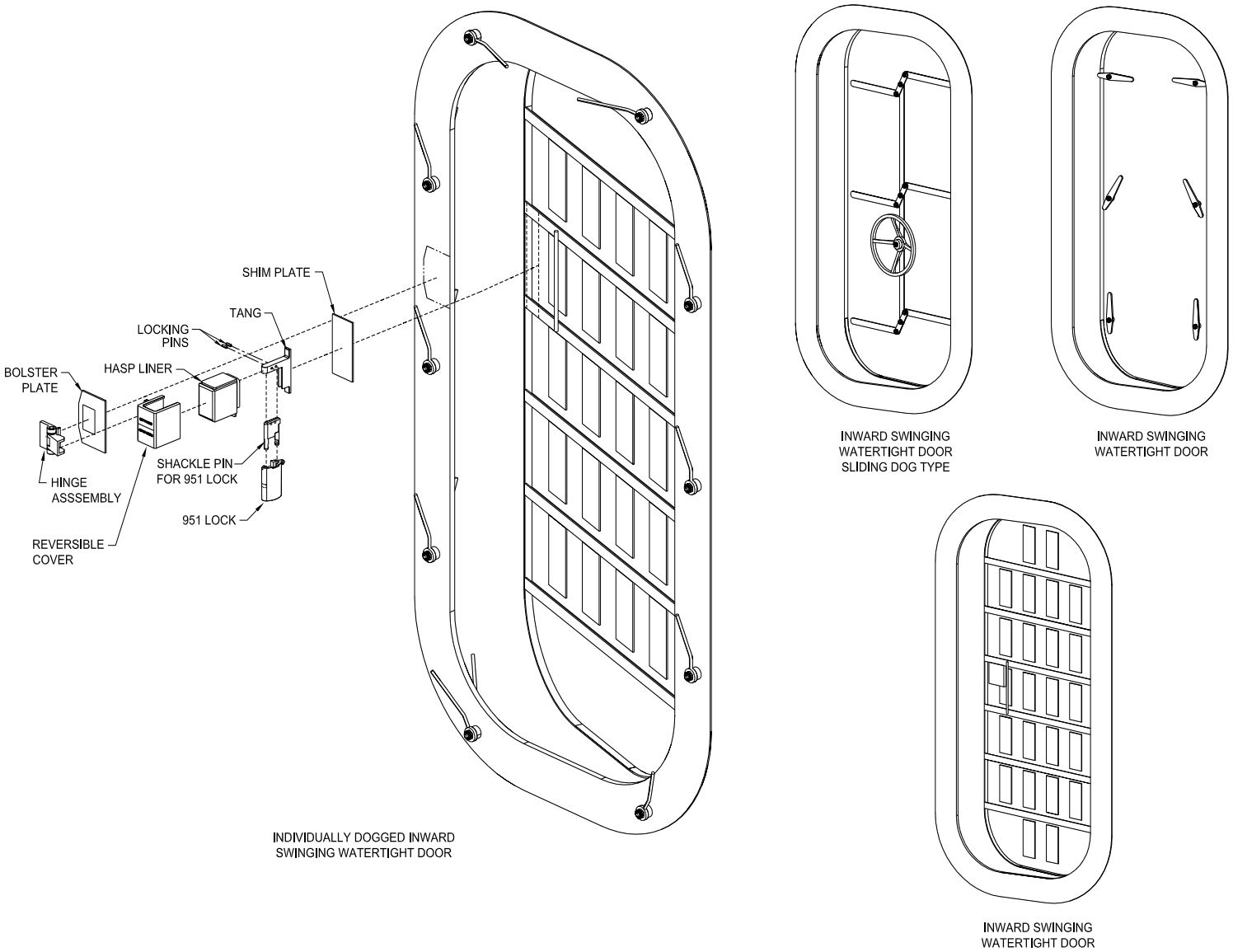

FIGURE 1. Configuration for left-hand or right-hand hinged doors swinging in to open, style 6.

Source: http://assist.dla.mil -- Downloaded: 2021-02-01T23:34Z
Check the source to verify that this is the current version before use.

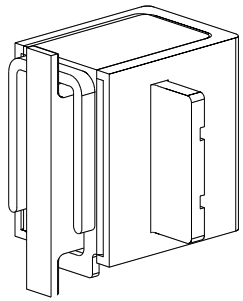

Hasp shown with liner, tang, cover, and packaging (as shipped from manufacturer).

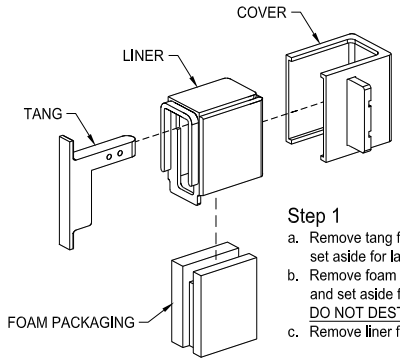

Step 1

a. Remove tang from packaging and set aside for later step.
b. Remove foam packaging from liner and set aside for later step. DO NOT DESTROY!
c. Remove liner from hasp cover.

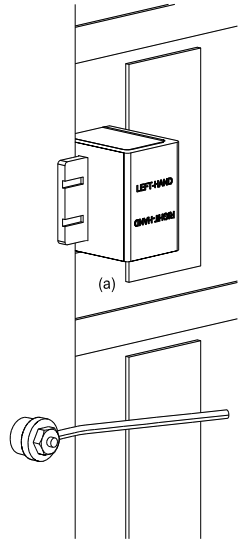

Step 2

General:
The hasp cover is reversible. Its final configuration must be determined during installation. The attitude of the liner within the hasp cover produces the left-hand or right-hand configuration. Figure (a) shows the hasp and liner in the left-hand mode. For use with inward swinging doors, the hasp cover and liner will be welded to the coaming. This procedure is therefore opposite of that for outward swinging doors. The hasp in its left-hand mode will be welded to the left-hand coaming. The hasp in its right-hand mode will be welded to the right-hand coaming.

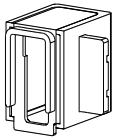

a. Determine the attitude of hasp liner and cover assembly by holding units against the door coaming as shown.
b. After trial assembly, weld the liner to the cover as shown. (Only use the welding rod provided or specified in this document. Strength and security capabilities will be seriously impaired if a non-certified rod is used.)

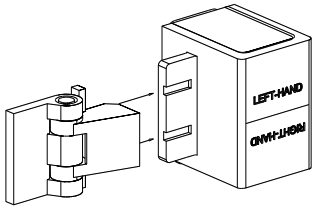

Step 3

General:
The use of a hinge assembly permits the hasp to be swung out of the door clear opening with the lock removed and after the door is opened. The door must first be opened because of the limited turning radius of the hinge assembly and the tang/liner interference that results.

a. Locate hinge assembly so that covered portion fits into grooves provided in the flange of the hasp cover.
b. Weld hinge assembly to hasp cover as shown.

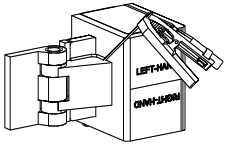

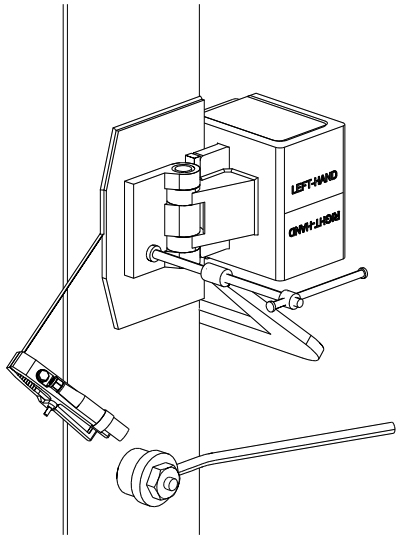

Step 4

General:
To provide a correctly aligned hasp, a bolster plate has been provided. This plate will be fully welded to the door coaming. The hasp cover/liner assembly will then be welded to it.

a. Position the bolster plate, the hinge and cover/liner assembly as shown. A minimum of 6 inches of clearance must be provided between the open locking end of the hasp and any obstruction to allow removal of the lock.
b. Clamp the plate and hasp cover/liner assembly in place.
c. Weld the bolster plate to the coaming as shown.
d. Weld the hinge and hasp cover/liner assembly to the bolster plate.
e. Remove clamp and allow welds to air cool.

WELDING ROD SPEC.

STAINLESS STEEL, TYPE E, CLASS I, 310-16 $^{3}/_{32}$ DIA.
AWS A5.4/A5.4M PER MIL-E-22200/2

FIGURE 2. Installation procedures for left-hand or right-hand hinged doors swinging in to open, style 6.

Source: http://assist.dla.mil -- Downloaded: 2021-02-01T23:34Z
Check the source to verify that this is the current version before use.

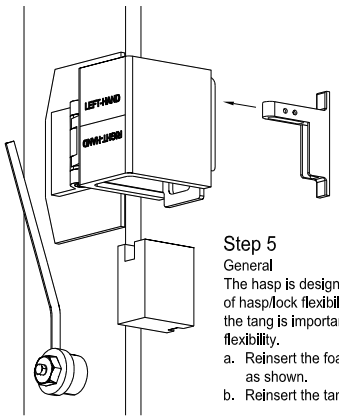

Step 5

General

The hasp is designed to provide a large degree of hasp/lock flexibility. Correct installation of the tang is important to ensuring the maximum flexibility.

a. Reinsert the foam packaging into the liner as shown.
b. Reinsert the tang into the packaging.

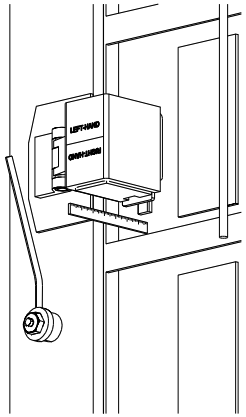

Step 5 (Cont)

c. Close and secure the door.
d. Swing hasp cover/liner assembly into position in door opening and measure distance from the tang flange to the door surface.
e. Fill any space greater than ⅛" with shim plates provided. The tang may be adjusted up to ⅛" but any more must be shimmed.
f. Weld shim plate to door.
g. Tack weld top and bottom of tang flanges.

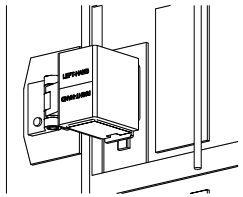

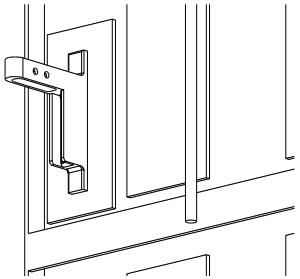

Step 5 (Cont)

h. Open door leaving tang attached.
i. Finish welding tang to door as shown Allow welds to air cool.
j. Remove foam packaging from cover/liner and discard.

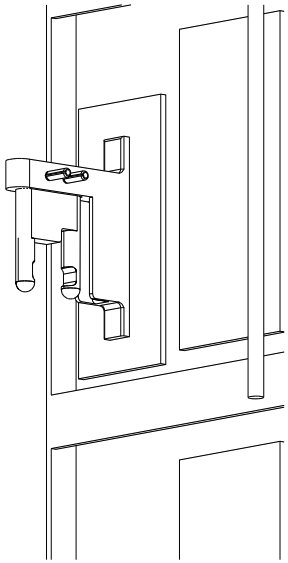

Step 6

General:

The hasp is designed to be used with the Sargent and Greenleaf, Inc., 951 lock. The 951 lock meets the high security requirements when used with the hasp. The lock requires its shackles to be removed (by a locksmith).

a. Insert the set of pins selected into the tang as shown and drive in locking pins.

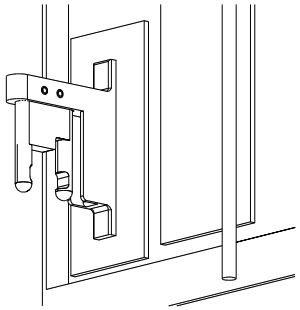

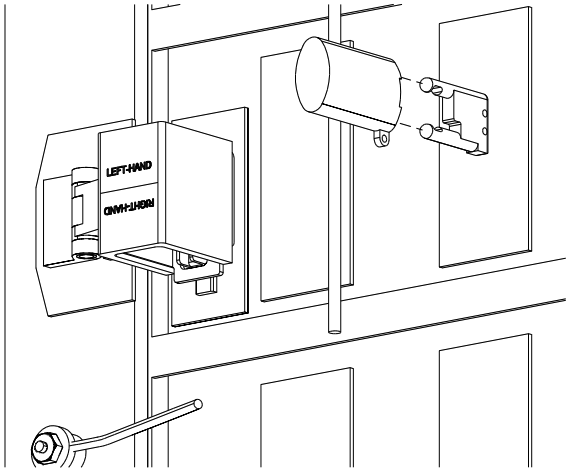

Step 7

General:

A second set of shackle pins are provided to allow the lock to be stored outside of the hasp. This set of pins may be installed anywhere on the door or coaming at the discretion of the operating personnel.

a. Hold or clamp shackle pins to selected surface.
b. Weld pins in place.

FIGURE 2. Installation procedures for left-hand or right-hand hinged doors swinging in to open, style 6 – Continued.

Source: http://assist.dla.mil -- Downloaded: 2021-02-01T23:34Z
Check the source to verify that this is the current version before use.

CHANGES FROM PREVIOUS ISSUE: Marginal notations are not used in this revision to identify changes with respect to the previous issue due to the extent of the changes.

CONCLUDING MATERIAL

Custodian:
Navy – SH

Review activity:
DLA – IS

Preparing activity:
Navy – SH
(Project 5340-2020-020)

NOTE: The activities listed above were interested in this document as of the date of this document. Since organizations and responsibilities can change, you should verify the currency of the information above using the ASSIST Online database at https://assist.dla.mil.

Source: http://assist.dla.mil -- Downloaded: 2021-02-01T23:34Z
Check the source to verify that this is the current version before use.