INCH-POUND
MIL-DTL-24653/5A(SH)
28 July 2020
SUPERSEDING
MIL-H-24653/5(SH)
30 May 1985

DETAIL SPECIFICATION SHEET

HASP, HIGH SECURITY, SHROUDED, FOR SHIPBOARD DOORS AND HATCHES USING HIGH SECURITY PADLOCK, STYLE 5

This specification sheet is approved for use by the Naval Sea Systems Command and is available for use by all Departments and Agencies of the Department of Defense.

The requirements for acquiring the product described herein shall consist of this specification sheet and MIL-DTL-24653.

REQUIREMENTS:

The configuration requirements applicable to a style 5 hasp shall conform to figure 1.

Installation instructions: Each hasp assembly shall be furnished with installation instructions as shown on figure 2.

AMSC N/A FSC 5340

DISTRIBUTION STATEMENT A. Approved for public release. Distribution is unlimited.

Source: http://assist.dla.mil -- Downloaded: 2021-02-01T23:33Z
Check the source to verify that this is the current version before use.

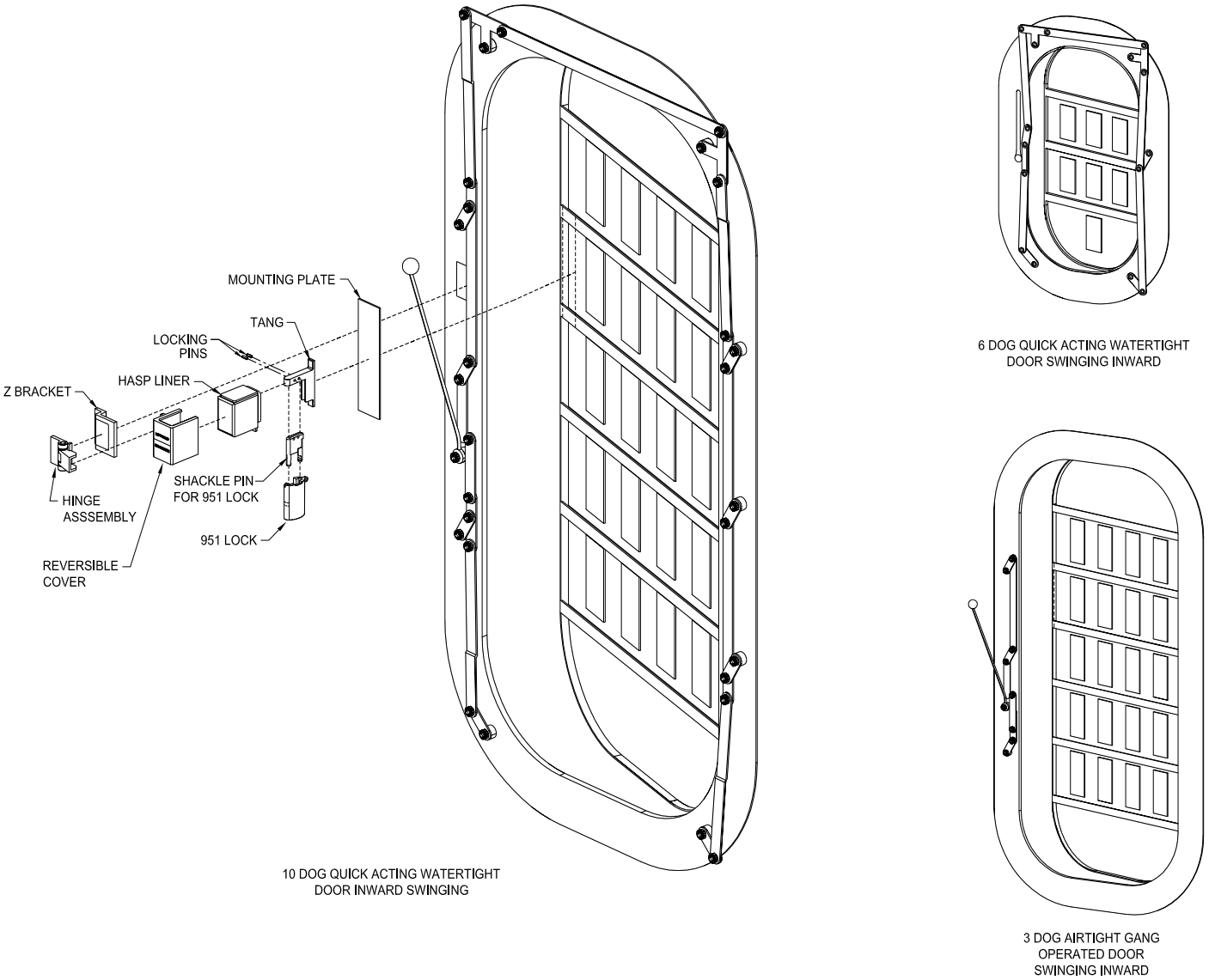

FIGURE 1. Configuration for left-hand or right-hand hinged quick acting watertight doors swinging in to open, style 5.

Source: http://assist.dla.mil -- Downloaded: 2021-02-01T23:33Z
Check the source to verify that this is the current version before use.

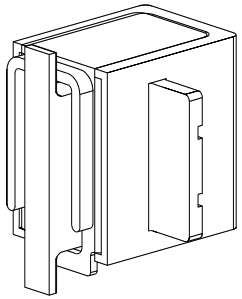

Hasp shown with liner, tang, cover, and packaging (as shipped from manufacturer).

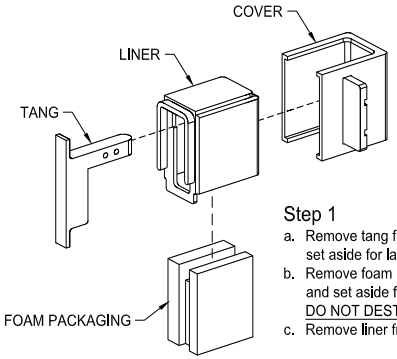

Step 1

a. Remove tang from packaging and set aside for later step.
b. Remove foam packaging from liner and set aside for later step. DO NOT DESTROY!
c. Remove liner from hasp cover.

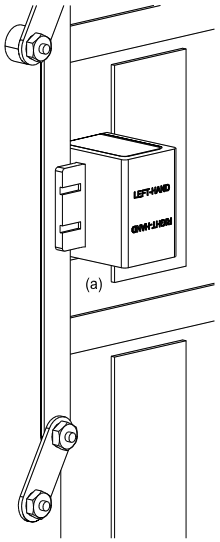

Step 2

General:
The hasp cover is reversible. Its final configuration must be determined during installation. The attitude of the liner within the hasp cover produces the left-hand or right-hand configuration. Figure (a) shows the hasp and liner in the left-hand mode. For use with inward swinging doors, the hasp cover and liner will be welded to a hinge assembly which will in turn be welded to the coaming. This procedure is therefore opposite of that for outward swinging doors. The hasp in its left-hand mode will be welded to the left-hand coaming. The hasp in its right-hand mode will be welded to the right-hand coaming as it would appear from the side of the door, which contains the mechanical dog linkage.

a. Determine the attitude of hasp liner and cover assembly by holding units against the door coaming as shown.
b. After trial assembly, weld the liner to the cover as shown. (Only use the welding rod provided or specified in this document. Strength and security capabilities will be seriously impaired if a non-certified rod is used.)

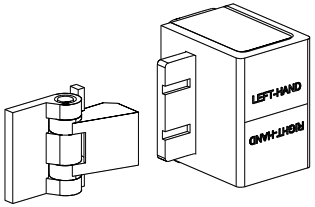

Step 3

General:
The use of a hinge assembly permits the hasp to be swung out of the door clear opening with the lock removed and after the door is opened. The door must first be opened because of the limited turning radius of the hinge assembly and the tang/liner interference that results.

a. Locate hinge assembly so that covered portion fits into grooves provided in the flange of the hasp cover.
b. Weld hinge assembly to hasp cover as shown.

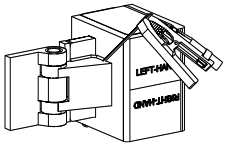

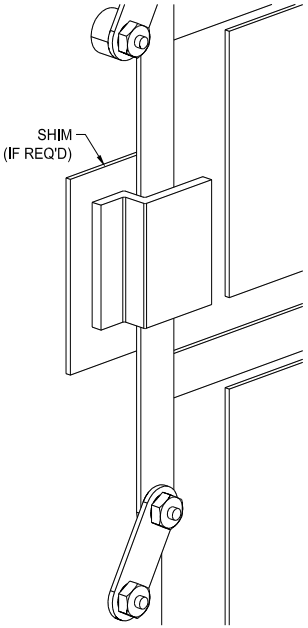

Step 4

General:
The presence of the quick acting dog mechanism on the side of the door where the hasp is to be mounted requires the use of special hardware. This will consist of a Z-bracket to bridge over the mechanism and a plate to mount the tang to the back side of the door.

a. Undog door to full open position.
b. Locate Z-bracket as shown so that it rests against quick acting mechanism but does not interfere with its operation. Rotate operator to determine maximum movement of linkages.
c. Shim(s) may be inserted between the door frame and the Z-bracket to maintain a minimum of $\frac{1}{8}$" clearance between operator linkage and Z-bracket throughout the entire operational cycle. If shim(s) are required, weld shims to door frame.

WELDING ROD SPEC.
STAINLESS STEEL, TYPE E, CLASS I, 310-16 $\frac{3}{32}$ DIA.
AWS A5.4/A5.4M PER MIL-E-22200/2

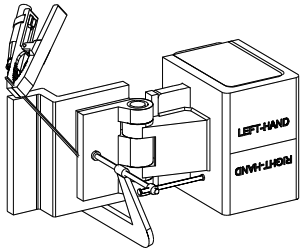

Step 5

Weld hinge/hasp assembly to Z-bracket in a horizontal position, maintaining the 1 inch dimension shown.

FIGURE 2. Installation procedures for left-hand or right-hand hinged quick acting watertight doors swinging in to open, style 5.

Source: http://assist.dla.mil -- Downloaded: 2021-02-01T23:33Z
Check the source to verify that this is the current version before use.

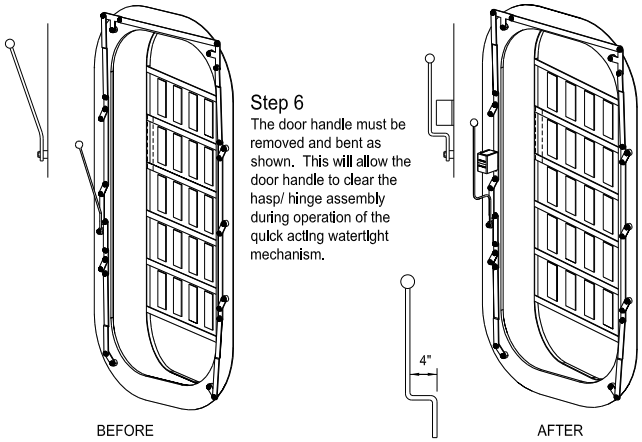

Step 6

The door handle must be removed and bent as shown. This will allow the door handle to clear the hasp/ hinge assembly during operation of the quick acting watertight mechanism.

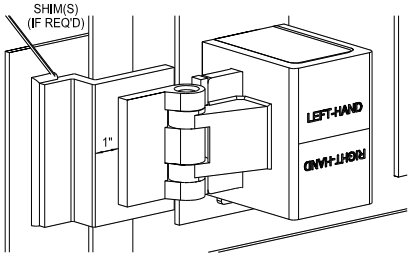

Step 7

a. Locate Z-bracket on frame as shown. Z-bracket/hinge/hasp assembly should be parallel to door stiffeners.
b. Undog door and verify that assembly does not contact quick acting mechanism during the process.
c. Tack weld the Z-bracket to the door frame, as shown.
d. Rotate the quick acting mechanism through a complete cycle to assure clearance between the Z-bracket and mechanism.

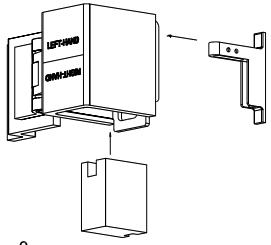

Step 8

General:

The hasp is designed to provide a large degree of hasp/lock flexibility. Correct installation of the tang is important to ensure the maximum of flexibility.

a. Reinsert the foam packaging into the liner as shown.
b. Reinsert the tang into the packaging

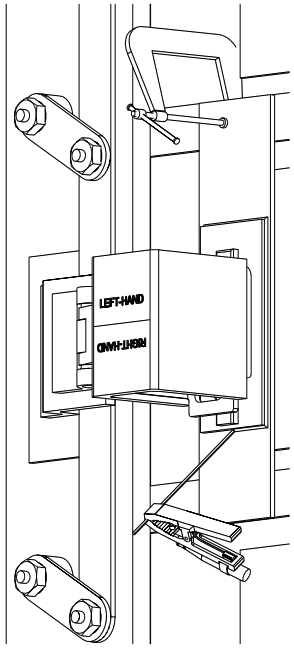

Step 9

a. Locate and clamp tang mounting plate to door super- structure. With the hasp parallel to the door face, fill any space between tang and plate greater than ⅛" with shim plates provided. The tang may be adjusted up to ⅛" but any more must be shimmed!
b. Weld shim plate to mounting plate (if required).
c. Tack weld top and bottom of tang flange to the mounting plate.
d. Mark plate location on door.
e. Remove mounting plate/tang assembly and finish welding tang to mounting plate (recommend welding in the horizontal position).
f. Remove foam packaging from liner and discard.

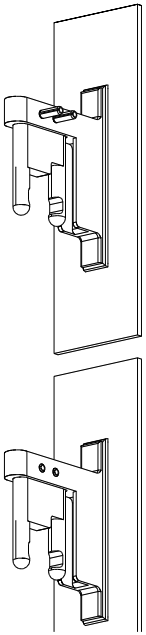

Step 10

General:

The hasp is designed to be used with the Sargent and Greenleaf, Inc., 951 lock. The 951 lock meets the high security requirements when used with the hasp. The lock requires its shackles to be removed (by a locksmith).

a. Insert the set of pins selected into the tang and drive in locking pins.
b. Reposition mounting plate/tang assembly and clamp the assembly to the door as previously marked.
c. Close and dog the door. With hasp body encompassing the shackle pins, assemble 951 lock, as appropriate, to the shackle pins. Assure that there is no interference between the lock body and the hasp body during the locking process, or between the tang and hasp liner while opening and closing the door. Interference may be eliminated by adjusting the mounting plate on the door so that the shackle pins/tang assembly is centered in the opening in the back side of the hasp liner.
d. Undog door and cycle door, hasp, quick acting watertight mechanism and lock through several operational cycles. The units operate satisfactory when: (1) there is no interferences between the door, hasp, and quick acting watertight door mechanism when opening or closing; and (2) there is no interference during assembly or disassembly of the lock body.
e. Full weld Z-bracket to door frame.
f. Repeat steps c and d above.
g. The mounting plate should be welded securely to door stiffeners.

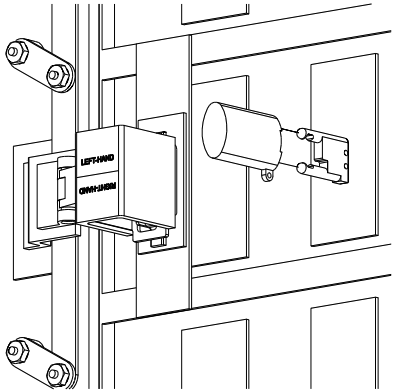

Step 11

General:

A second set of shackle pins are provided to allow the locks to be stored outside the hasp. This set of pins may be installed anywhere in the door or coaming at the discretion of the operating personnel.

a. Hold or clamp shackle pins to selected surface.
b. Weld pins in place.

FIGURE 2. Installation procedures for left-hand or right-hand hinged quick acting watertight doors swinging in to open, style 5 – Continued.

Source: http://assist.dla.mil -- Downloaded: 2021-02-01T23:33Z
Check the source to verify that this is the current version before use.

CHANGES FROM PREVIOUS ISSUE: Marginal notations are not used in this revision to identify changes with respect to the previous issue due to the extent of the changes.

CONCLUDING MATERIAL

Custodian:
Navy – SH

Review activity:
DLA – IS

Preparing activity:
Navy – SH
(Project 5340-2020-019)

NOTE: The activities listed above were interested in this document as of the date of this document. Since organizations and responsibilities can change, you should verify the currency of the information above using the ASSIST Online database at https://assist.dla.mil.

Source: http://assist.dla.mil -- Downloaded: 2021-02-01T23:33Z
Check the source to verify that this is the current version before use.