INCH-POUND
MIL-DTL-24653/3A(SH)
28 July 2020
SUPERSEDING
MIL-H-24653/3(SH)
30 May 1985

DETAIL SPECIFICATION SHEET

HASP, HIGH SECURITY, SHROUDED, FOR SHIPBOARD DOORS AND HATCHES USING HIGH SECURITY PADLOCK, STYLE 3

This specification sheet is approved for use by the Naval Sea Systems Command and is available for use by all Departments and Agencies of the Department of Defense.

The requirements for acquiring the product described herein shall consist of this specification sheet and MIL-DTL-24653.

REQUIREMENTS:

The configuration requirements applicable to a style 3 hasp shall conform to figure 1.

Installation instructions: Each hasp assembly shall be furnished with installation instructions as shown on figure 2.

AMSC N/A FSC 5340

DISTRIBUTION STATEMENT A. Approved for public release. Distribution is unlimited.

Source: http://assist.dla.mil -- Downloaded: 2021-02-01T23:31Z
Check the source to verify that this is the current version before use.

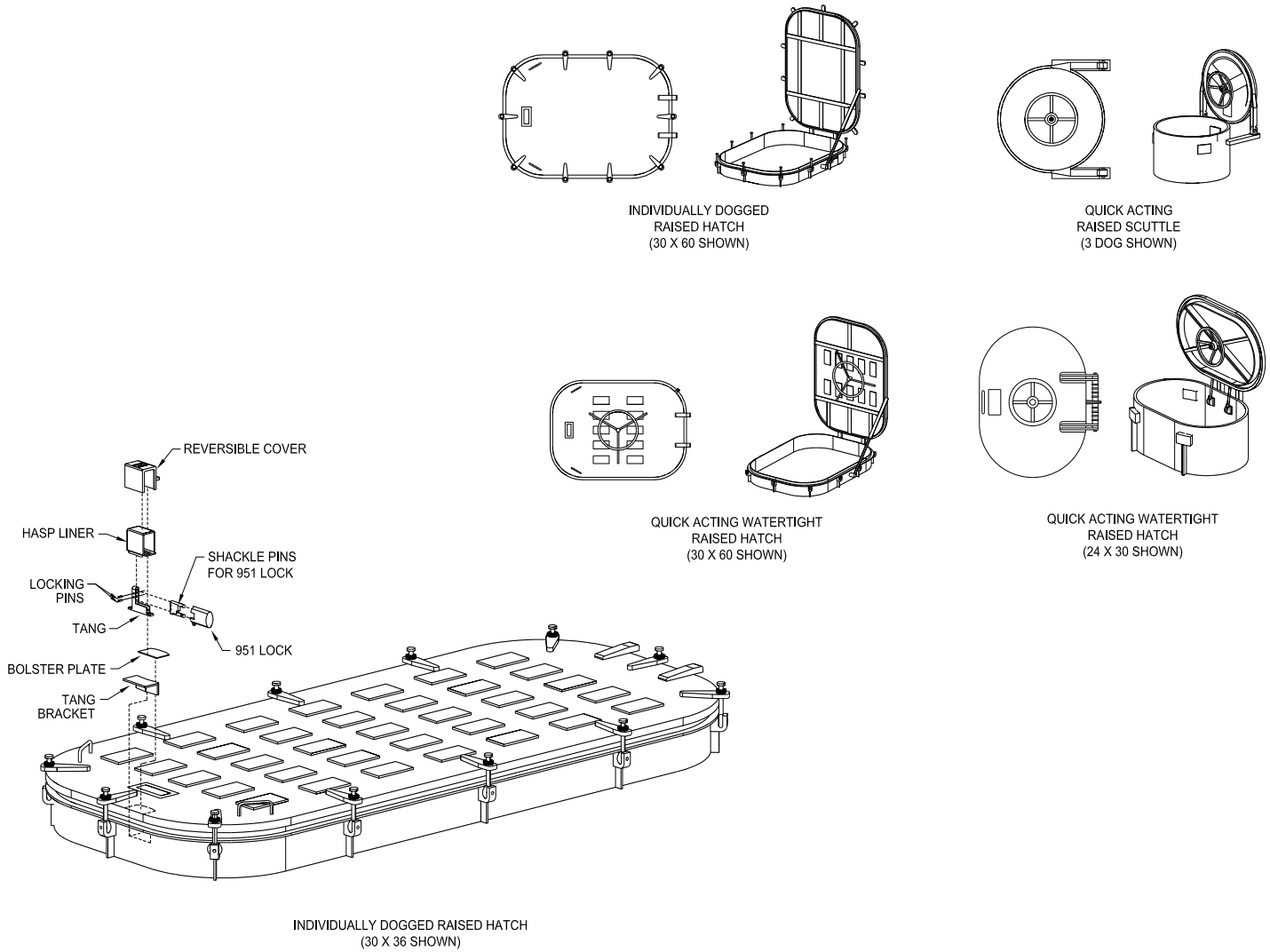

FIGURE 1. Configuration for watertight hatches, style 3.

Source: http://assist.dla.mil -- Downloaded: 2021-02-01T23:31Z
Check the source to verify that this is the current version before use.

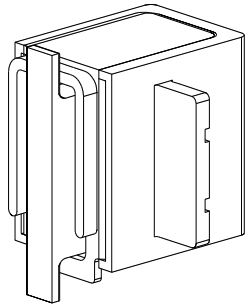

Hasp shown with liner, tang, cover, and packaging (as shipped from manufacturer).

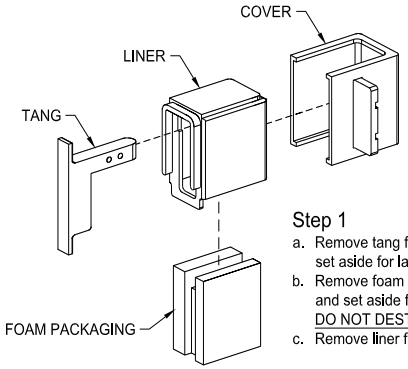

Step 1

a. Remove tang from packaging and set aside for later step.
b. Remove foam packaging from liner and set aside for later step. DO NOT DESTROY!
c. Remove liner from hasp cover.

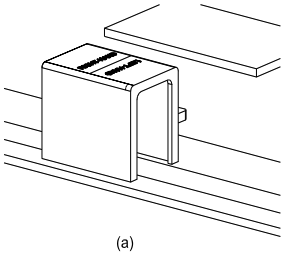

(a)

Step 2

General:
The hasp cover is reversible. Its final configuration must be determined during installation. The attitude of the liner within the hasp cover produces the left-hand or right-hand configuration. Figure (a) shows the hasp and liner in the right-hand mode. In the case of a watertight hatch, the two available configurations allow the user to select the direction from which the lock is to be accessible.

a. Determine the attitude of the hasp liner and cover assembly by holding units against the door as shown.
b. After trial assembly, weld the liner to the cover as shown. (Only use the welding rod provided or specified in this document. Strength and security capabilities will be seriously impaired if a non-certified rod is used.)

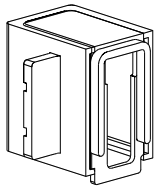

(b)

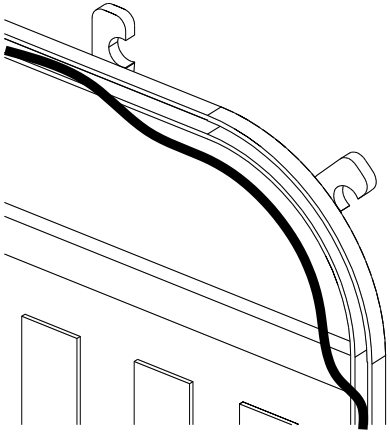

Step 3

Remove watertight gasket to prevent damage from welding heat or replace gasket after welding.

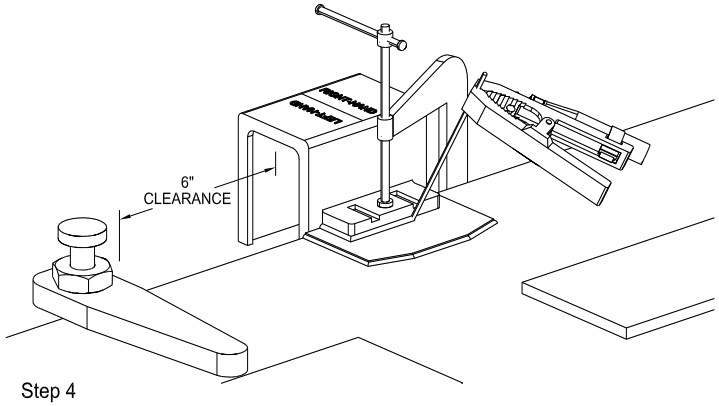

Step 4

General:
To strengthen the hatch face, a bolster plate has been provided. This plate will be fully welded to the hatch face. The hasp cover/liner assembly will then be welded to it.

a. Position the bolster plate and hasp cover/liner assembly as shown. A minimum of 6 inches of clearance must be provided between the open locking end of the hasp and any obstruction to allow removal of the lock.
b. Clamp the hasp cover/liner assembly in place.
c. Weld the bolster plate to the door face as shown.
d. Weld the hasp cover/liner assembly to the bolster plate.
e. Remove clamp and allow welds to air cool.

Step 5

Reinstall gasket.

WELDING ROD SPEC.

STAINLESS STEEL, TYPE E, CLASS I, 310-16 $\frac{3}{32}$ DIA.
AWS A5.4/A5.4M PER MIL-E-22200/2

FIGURE 2. Installation procedures for watertight hatches, style 3.

Source: http://assist.dla.mil -- Downloaded: 2021-02-01T23:31Z
Check the source to verify that this is the current version before use.

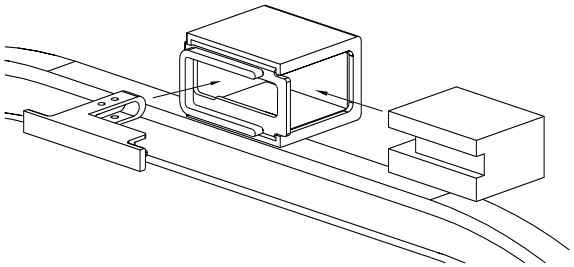

Step 6

General:

The Style 3 hasp is designed to provide a large degree of hasp/lock flexibility. Correct installation of the tang is important to ensuring the maximum of flexibility. Also, because a raised hatch has no mounting surface for the tang, a tang bracket has been provided. The tang bracket will be welded to the raised coaming and the tang to the bracket.

a. Reinsert the foam packaging into the liner as shown.
b. Reinsert the tang into the packaging.

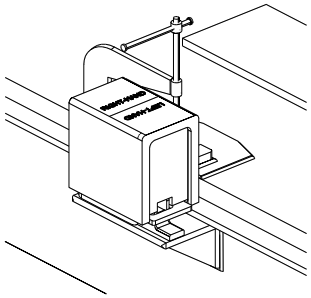

Step 6 (cont.)

c. Close and dog hatch.
d. Clamp tang bracket to tang with angled leg against the hatch coaming as shown.
e. Weld tang bracket to raised coaming as shown.
f. Tack weld top and bottom of tang flanges to tang bracket.
g. Open hatch leaving tang attached to bracket.

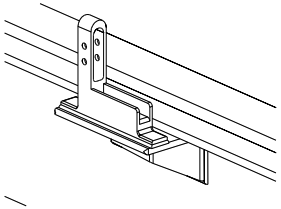

h. Finish welding tang to tang bracket as shown and allow welds to air cool.
i. Remove foam packaging from cover/liner and discard.

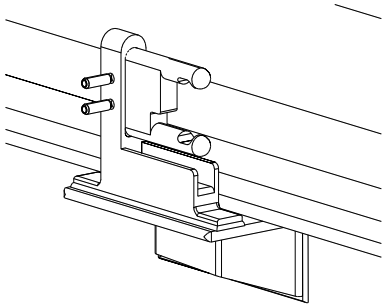

a. Insert the set of pins selected into the tang as shown and drive in locking pins.

Step 7

General:

The Style 3 hasp is designed to be used with the Sargent and Greenleaf, Inc., 951 lock. The 951 lock meets the high security requirements when used with the Style 3 hasp. The lock requires its shackles to be removed (by a locksmith).

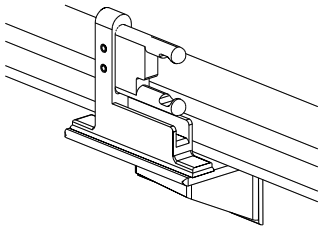

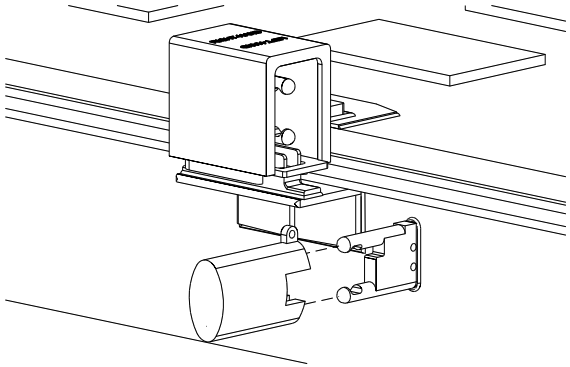

Step 8

A second set of shackle pins are provided to allow the lock to be stored outside the hasp. This set of pins may be installed anywhere on the hatch or coaming at the discretion of the operating personnel.

a. Hold or clamp shackle pins to selected surface.
b. Weld pins in place.

FIGURE 2. Installation procedures for watertight hatches, style 3 – Continued.

Source: http://assist.dla.mil -- Downloaded: 2021-02-01T23:31Z
Check the source to verify that this is the current version before use.

CHANGES FROM PREVIOUS ISSUE: Marginal notations are not used in this revision to identify changes with respect to the previous issue due to the extent of the changes.

CONCLUDING MATERIAL

Custodian:
Navy – SH

Review activity:
DLA – IS

Preparing activity:
Navy – SH
(Project 5340-2020-017)

NOTE: The activities listed above were interested in this document as of the date of this document. Since organizations and responsibilities can change, you should verify the currency of the information above using the ASSIST Online database at https://assist.dla.mil.

Source: http://assist.dla.mil -- Downloaded: 2021-02-01T23:31Z
Check the source to verify that this is the current version before use.