DoD Lock Program

NAVFAC Engineering and Expeditionary Warfare Center
1100 23rd Avenue, Port Hueneme, CA 93043
(800) 290-7607 or (805) 982-1212
https://www.navfac.navy.mil/go/locks

Standard Plans for

High Security Hasps

and

Physical Security Equipment Ashore

HASP STYLE DETERMINATION

HIGH SECURITY HASP
STYLE 0957

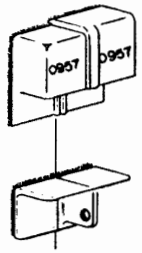

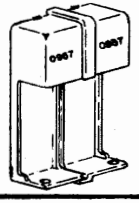

STYLE 0957
MK-2 MOD-9

TYPE I WITHOUT ASTRAGAL

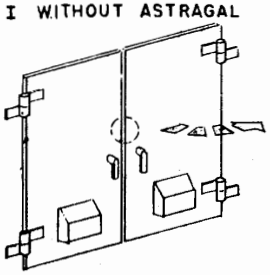

WITH ASTRAGAL

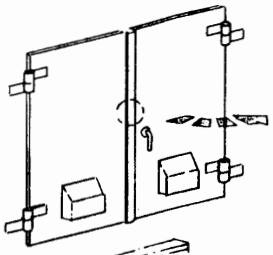

TYPE III SINGLE DOOR HINGED RIGHT

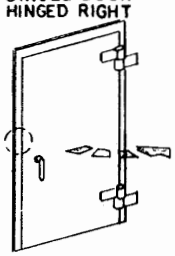

TYPE VI SLIDING DOOR MOVING RIGHT

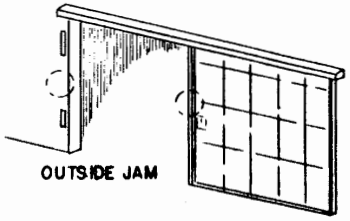

TYPE IX DOUBLE SLIDING DOORS

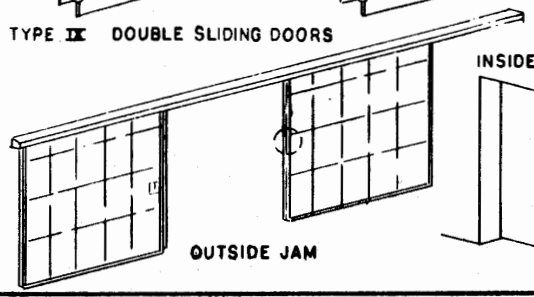

INSIDE JAM

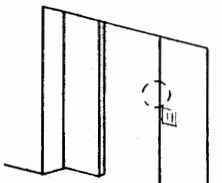

TYPE XI SINGLE DOOR HINGED LEFT

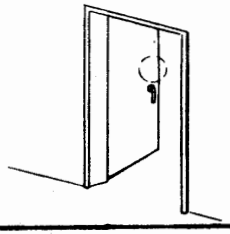

TYPE XIII SLIDING DOOR MOVING RIGHT

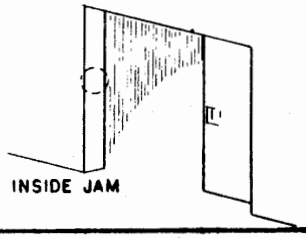

HIGH SECURITY HASP
STYLE 0958

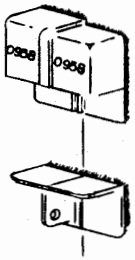

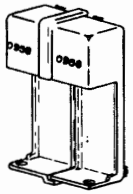

STYLE 0958
MK-2 MOD-9

TYPE II WITHOUT ASTRAGAL

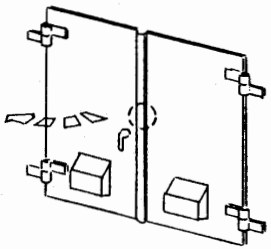

WITH ASTRAGAL

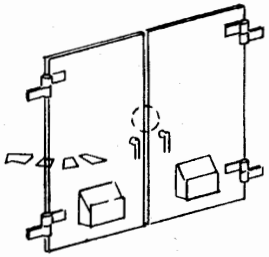

TYPE IX DOUBLE SLIDING DOORS
(SEE ABOVE)

TYPE IV SINGLE DOOR HINGED LEFT

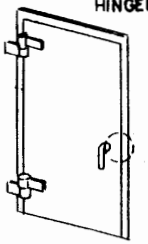

TYPE X SINGLE DOOR HINGED RIGHT

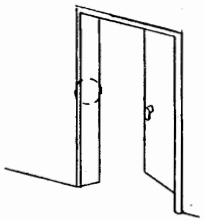

TYPE V SLIDING DOOR MOVING LEFT

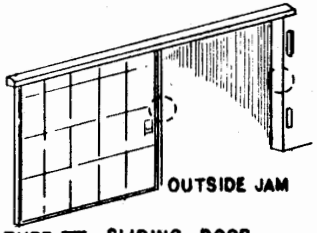

TYPE XII SLIDING DOOR MOVING LEFT

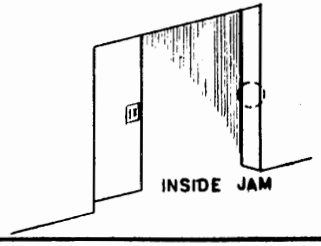

NOTICE: THE INFORMATION AND DETAILS OF THIS DRAWING ARE PROPRIETARY TO THE NAVY. REPRODUCTION OF THIS DRAWING OR USE FOR OTHER PURPOSES THAN THE PROCUREMENT OF NAVY PRODUCTS IS PROHIBITED.

NAPEC 0957 SHEET 1 OF 3 A

NOTE:-

1. ITEM 3 TO BE FURNISHED BY CUSTOMER.

REVISIONS					
SYMB	LTR	DESCRIPTION	DATE	D	C	S APPROVAL
	A	ADDED 1/2 FILLERS TO #1 & #2 TITLE REVISED	5-78			

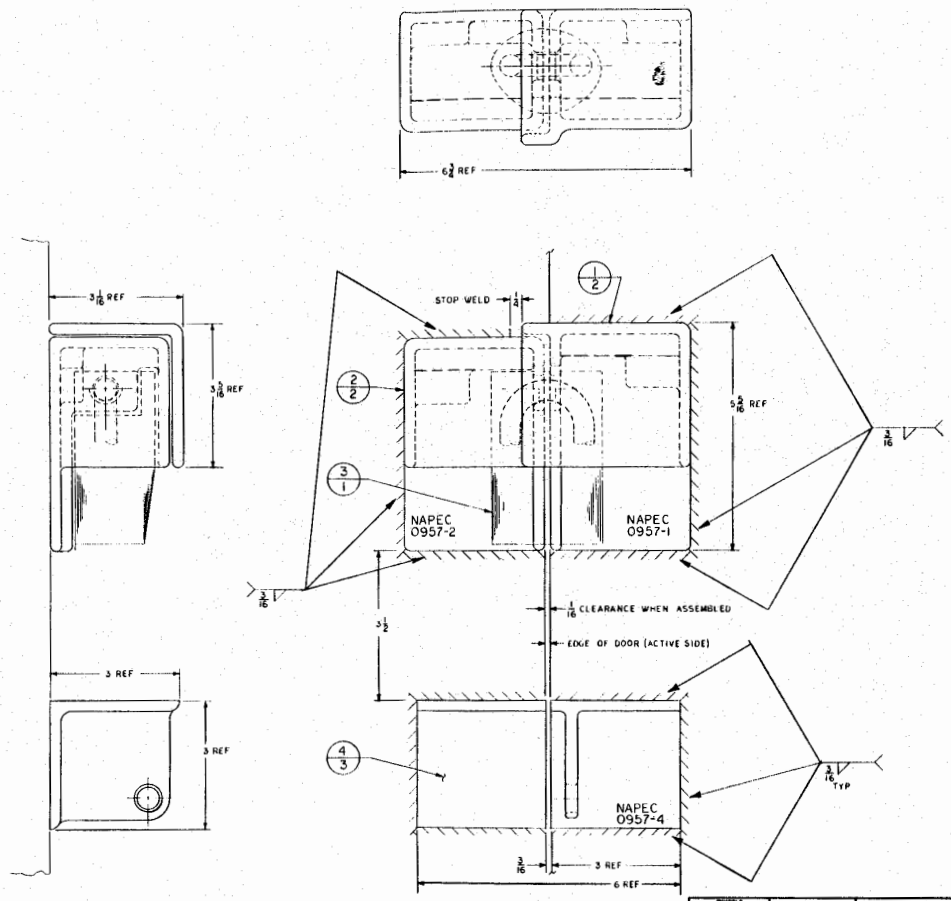

ITEM	NOMENCLATURE	NOTE	QTY	REMARKS
4	BOTTOM ATTACK SHIELD		1	SEE DETAIL
3	PADLOCK	1	1	REF.
2	CLASP		1	SEE DETAIL
1	COVER		1	SEE DETAIL

SYMBOLS: TYPE; FIELD TYPE; TYPE EXCLUSIVE; FIELD TYPE EXCLUSIVE

SCALE 1/1 F

APPROVED 21 Dec 1976

DESIGN		
DRAWING		
TRACING		
CHECKED		
ENGINEER	SALLADE	7/77
		12-84
		10-1-16

HIGH SECURITY HASP, HINGED OR SLIDING HORIZONTAL, RH MK 2 MOD 8

ASSEMBLY

DEPARTMENT OF THE NAVY
NAVAL AMMUNITION PRODUCTION ENGINEERING CENTER
CRANE, INDIANA

NAPEC DRAWING NO. 0957 SHEET 1 OF 3 A

REV	LTR	REVISIONS DESCRIPTION	DATE	APPROVAL
REF	A	ADDED 1/2 SQ FILLERS TITLE REVISED	5-78	

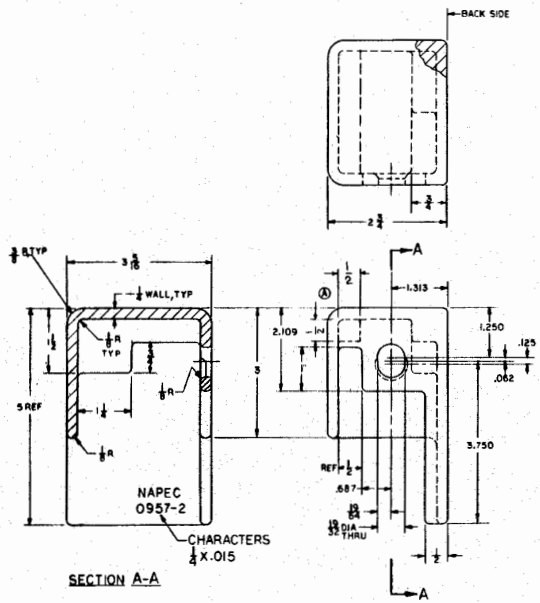

SECTION A-A

(2) OF NAPEC DWG NO. 0957
NAME - CLASP
MATL - INVESTMENT CASTING/MIL-C-6021 CL-2B STAINLESS STEEL CA-6NM

HEAT TREAT - RC 36/40

SURFACE FINISH - NAS-823/C-25

INSP - ZYGLO PER MIL SPEC-I-6866

* SPECIAL NOTE:
SEE RECOMMENDED LINEAR TOLERANCES.

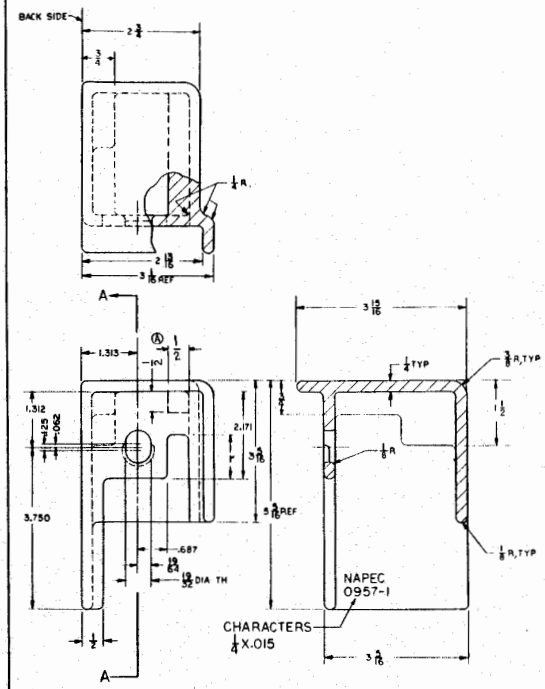

SECTION A-A

(1) OF NAPEC DWG NO. 0957
NAME - COVER
MATL - INVESTMENT CASTING / MIL-C-6021 CL-2B STAINLESS STEEL CA-6NM

HEAT TREAT - RC-36/40

SURFACE FINISH - NAS-823/C-25
INSP - ZYGLO PER MIL-SPEC-I-6866

* SPECIAL NOTE:
SEE RECOMMENDED LINEAR TOLERANCE.

* RECOMMENDED LINEAR TOLERANCE

DIMENSION	NORMAL
UP TO 1/2	±.007
UP TO 1"	±.010
UP TO 2"	±.013
UP TO 3"	±.016
UP TO 4	±.019
UP TO 5	±.022
UP TO 6"	±.025

APPROVED 23 Dec 1976
Robert E. Hetrick
SCALE FULL
SIZE F
HIGH SECURITY HASP
HINGED OR SLIDING
HORIZONTAL RH
MK 2 MOD 8
DETAILS
DEPARTMENT OF THE NAVY
NAPEC 0957
SHEET 2 OF 3
A

REVISIONS				
ZONE	LTR	DESCRIPTION	DATE	APPROVAL
	A	TITLE REVISED	5-78	

NAPEC 0957 SHEET 3 of 3 A

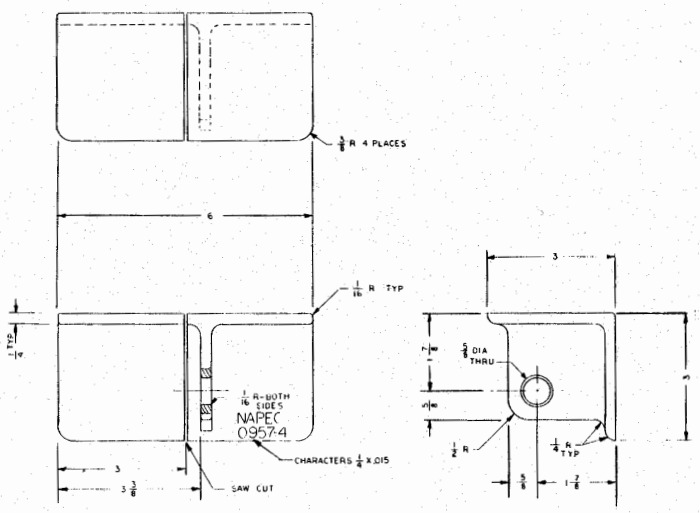

(4) OF NAPEC DWG NO 0957
NAME: BOTTOM ATTACK SHIELD
MATL: INVESTMENT CASTING MIL-C-6021 CL 2B
STAINLESS STEEL CA 6NM

HEAT TREAT: RC 36/40

SURF REQT: NAS 823/C-25
SPECIAL NOTE: LINEAR TOLERANCES

UP TO 1/2"	±.007
" " 1"	±.010
" " 2"	±.013
" " 3"	±.016
" " 4"	±.019
" " 5"	±.022
" " 6"	±.025

INSP: ZYGLO PER MIL SPEC - I-6866 CL 2B

SCALE FULL	SIZE F	5/5/77	12-76

HIGH SECURITY HASP
HINGED OR SLIDING
HORIZONTAL RH
MK 2 MOD 8

DETAIL

DEPARTMENT OF THE NAVY
NAVAL AMMUNITION DEPOT
NAVAL AMMUNITION PRODUCTION
EXPLOSIVES CENTER
ALBANY, OREGON

NAPEC DRAWING NO 0957
SHEET 3 OF 3
A

REVISIONS					
ZONE	LTR	DESCRIPTION	DATE	APPROVAL	
	A	ADDED MATL TO 1 & 2 TITLE REVISED	5-78		

NOTE:-
1. ITEM 3 TO BE FURNISHED BY CUSTOMER

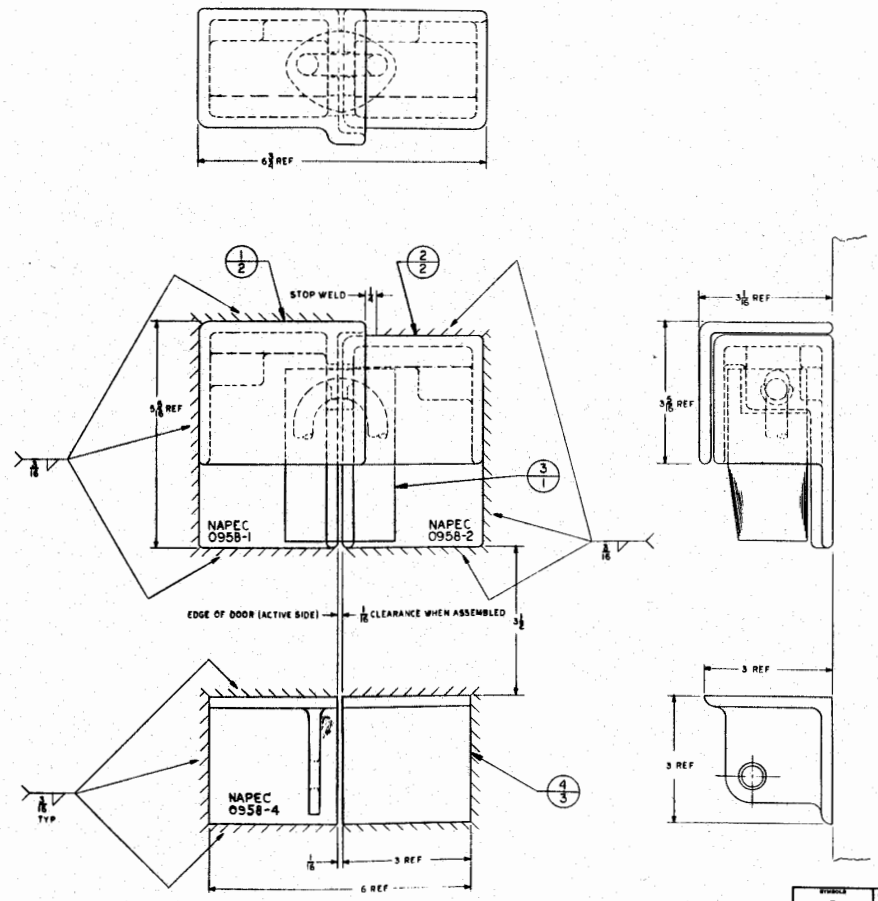

ITEM	NOMENCLATURE	NOTE	QTY	REMARKS
4	BOTTOM ATTACK SHIELD		1	SEE DETAIL
3	PADLOCK	1	1	REF.
2	CLASP		1	SEE DETAIL
1	COVER		1	SEE DETAIL

HIGH SECURTY HASP
HINGED OR SLIDING
HORIZONTAL LH
MK 2 MOD 8

ASSEMBLY

DEPARTMENT OF THE NAVY
NAVAL ORDNANCE
SYSTEMS COMMAND
NAVAL ORDNANCE STATION
INDIANHEAD DIVISION
INDIAN HEAD, MARYLAND

NAPEC DRAWING NO. 0958
SHEET 1 OF 3
LATEST REVISION A

SCALE: 1/1
F
3-3-78 12-76
GJS & JEL 10-6-76

REVISIONS			
ZONE	LTR	DESCRIPTION	DATE
	A	ADDED 1/2 SQ FILLERS TITLE REVISED	5-78

NAPEC 0958 SHEET 2 OF 3 A

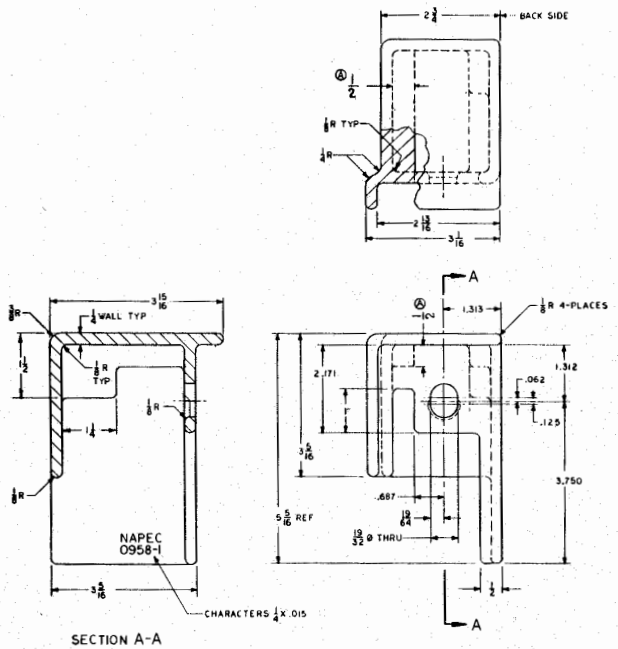

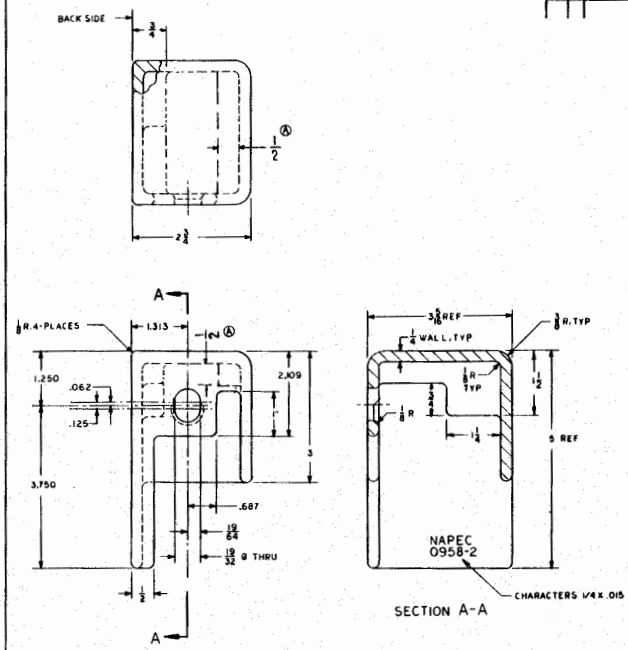

(1) OF NAPEC DWG NO: 0958
NAME: COVER
MATL: INVESTMENT CAST/MIL-C-6021 CL-2B
STAINLESS STEEL CA-NM
HEAT TREAT: RC 36-40
SURFACE FINSH: NAS-823/C25
INSP: ZYGLO PER MIL-SPEC-I-6866
SPECIAL NOTE:
SEE RECOMMENDED LINEAR TOLERANCE

(2) OF NAPEC DWG NO: 0958
NAME: CLASP
MATL: INVESTMENT CAST/MIL-C-6021 CL-2B
STAINLESS STEEL CA-6NM
HEAT TREAT: RC 36/40
SURFACE FINSH: NAS 823/C-25
INSP ZYGLO PER MIL-SPEC-I-6866
SPEC NOTE:
SEE RECOMMENDED LINEAR TOLERANCE

RECOMMENDED LINEAR TOLERANCE	
DIMENSION	NORMAL
UP TO 1/2"	±.007
UP TO 1"	±.010
UP TO 2"	±.013
UP TO 3"	±.016
UP TO 4"	±.019
UP TO 5"	±.022
UP TO 6"	±.025

SCALE 1/1

HIGH SECURITY HASP
HINGED OR SLIDING
HORIZONTAL LH
MK 2 MOD 8

DETAILS

DEPARTMENT OF THE NAVY

NAPEC 0958 SHEET 2 OF 3 A

REVISIONS				
ZONE	LTR.	DESCRIPTION	DATE	APPROVAL
	A	TITLE REVISED	5-78	

NAPEC 0958 SHEET 3 OF 3 REV A

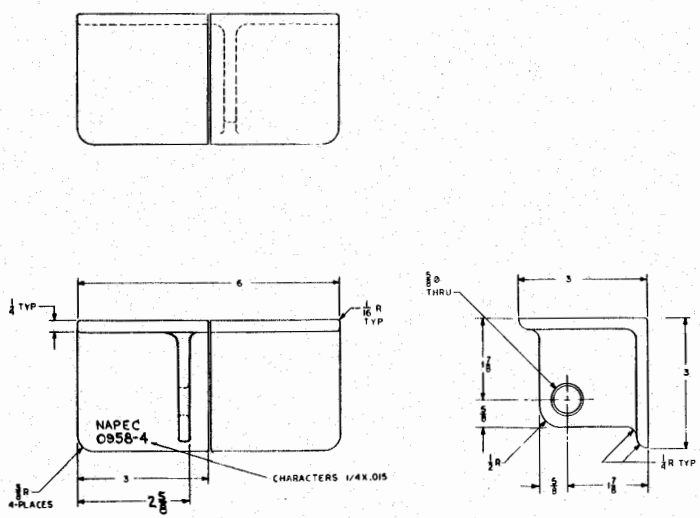

(4) OF NAPEC DWG NO: 0958
NAME: BOTTOM ATTACK SHIELD
MATL: INVESTMENT CASTING/MIL-C-6021 CL-2B
STAINLESS STEEL CA-6NM
HEAT TREAT: RC 36/40
SURF REQT: NAS 823/C-25
SPCL NOTE: LINEAR TOLERANCES

UP TO 1/2	±.007
" " 1"	±.010
" " 2	±.013
" " 3	±.016
" " 4	±.019
" " 5	±.022
" " 6	±.026

INSP: ZYGLO PER MIL-SPEC-I 6866

SCALE: 1/1	SIZE F	HIGH SECURITY HASP HINGED OR SLIDING HORIZONTAL LH MK 2 MOD 8	DEPARTMENT OF THE NAVY
		DETAIL	NAPEC 0958 SHEET 3 OF 3 A

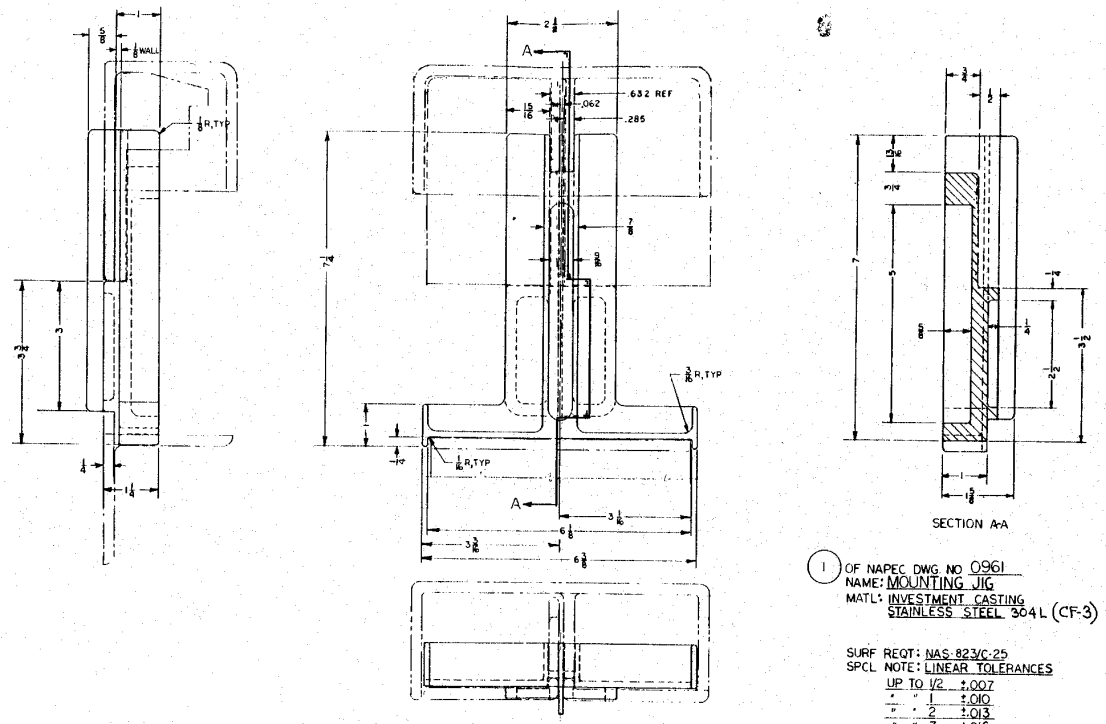

(1) OF NAPEC DWG NO 0961
NAME: MOUNTING JIG
MATL: INVESTMENT CASTING
STAINLESS STEEL 304L (CF-3)

SURF REQT: NAS 823/C-25
SPCL NOTE: LINEAR TOLERANCES

UP TO 1/2	±.007
" " 1	±.010
" " 2	±.013
" " 3	±.016
" " 4	±.019
" " 5	±.022

ITEM	NOMENCLATURE	QTY	NOTE	REMARKS
1	MOUNTING JIG	1		

HIGH SECURITY
HASP HINGED
MK 2 (MOD 7)

MOUNTING JIG

ASSEMBLY & DETAIL

DEPARTMENT OF THE NAVY
NAVAL SEA
SYSTEMS COMMAND
NAVAL ORDNANCE PRODUCTION
ENGINEERING CENTER
CRANE, INDIANA

NAPEC DRAWING NO. 0961

SHEET 1 OF 1

SCALE 1:1

DRAWN 1-22-71

APPROVED 9 MAR 1977

NAPEC 1960

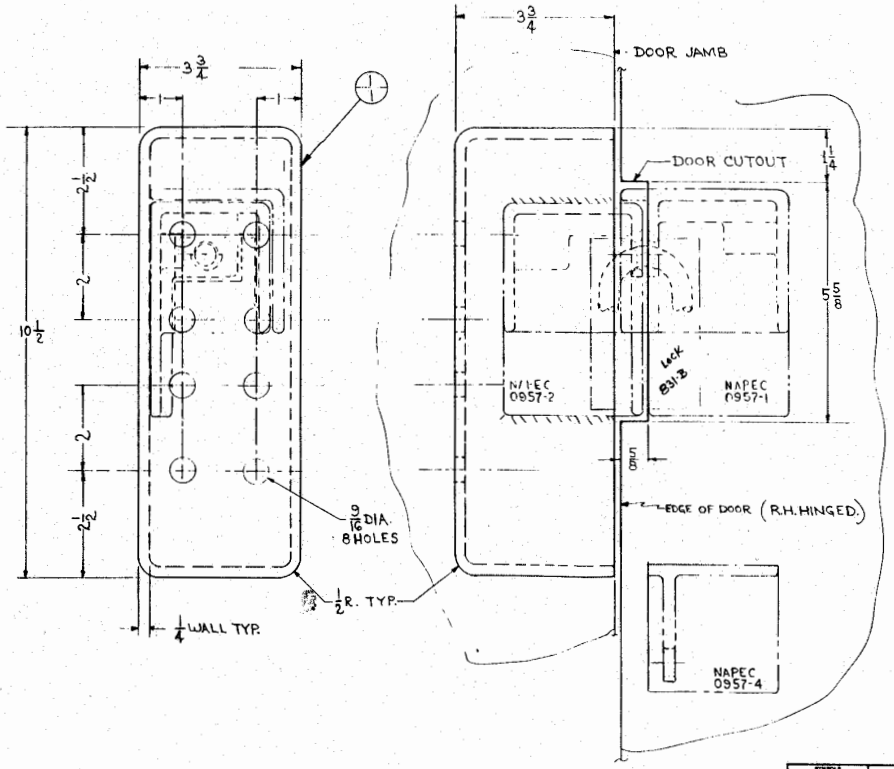

R.H. INSTALLATION SHOWN (0957)
L.H. OPPOSITE (0958)

(1) UNIVERSAL MTG. BOX.
MAT'L. STAINLESS STEEL TYPE 316
AMS 5360 OR CF8M ASTM-296
STANDARD TOLERANCES for INVESTMENT CASTINGS, LINEAR & FLATNESS.

SYMBOLS: FINISH; WELD TYP.; FIELD WELD; FIELD SEALANT	SEE NOTE	24 May 1976	WALL MOUNTING BOX for SINGLE DOOR & 0957 or 0958 HASP.
SCALE 1:1	F	J.J. SALLADE 5-76	ASSY. & DETAIL

DEPARTMENT OF THE NAVY
NAVAL SEA
SYSTEMS COMMAND
NAVAL AMMUNITION PRODUCTION
ENGINEERING CENTER
CRANE, INDIANA

NAPEC DRAWING NO. 1286
SHEET 1 OF 1

NAPEC 1286 SHEET 1 of 1

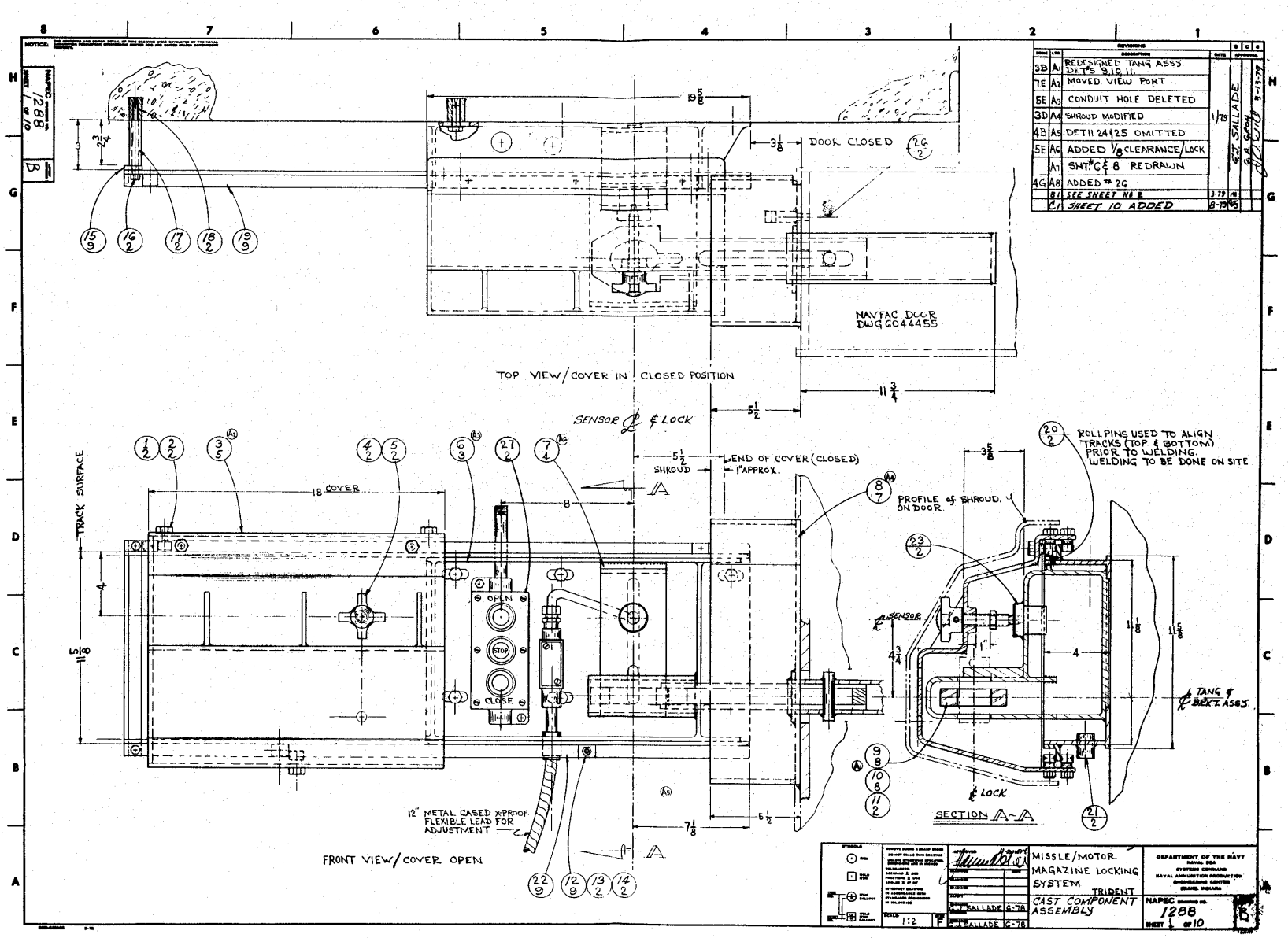
TOP VIEW/COVER IN CLOSED POSITION
DOOR CLOSED
NAVFAC DOOR DWG 6044455
SENSOR ℄ & LOCK
END OF COVER (CLOSED) 1" APPROX.
SHROUD
TRACK SURFACE
COVER
PROFILE of SHROUD ON DOOR.
ROLL PINS USED TO ALIGN TRACKS (TOP & BOTTOM) PRIOR TO WELDING. WELDING TO BE DONE ON SITE
℄ SENSOR
℄ TANG & ℄ BRKT ASSS.
℄ LOCK
SECTION A-A
OPEN
STOP
CLOSE
12" METAL CASED XPROOF FLEXIBLE LEAD FOR ADJUSTMENT
FRONT VIEW/COVER OPEN
REVISIONS
REDESIGNED TANG ASSS. DETS 9,10,11.
MOVED VIEW PORT
CONDUIT HOLE DELETED
SHROUD MODIFIED
DETIL 24&25 OMITTED
ADDED 1/8 CLEARANCE/LOCK
SHT. 6 & 8 REDRAWN
ADDED # 2G
SEE SHEET NO 8
SHEET 10 ADDED
MISSLE/MOTOR MAGAZINE LOCKING SYSTEM
TRIDENT
CAST COMPONENT ASSEMBLY
DEPARTMENT OF THE NAVY
NAVAL SEA SYSTEMS COMMAND
NAVAL AMMUNITION PRODUCTION ENGINEERING CENTER
ERIE, INDIANA
NAPEC 1288
SHEET 1 OF 10
SCALE 1:2
BALLADE 6-78
BALLADE 6-78
NAPEC 1288 SHT 8 OF 10

NOTICE: THE INFORMATION AND DESIGN DETAILS OF THIS DRAWING WERE DEVELOPED BY THE NAVAL AMMUNITION PRODUCTION ENGINEERING CENTER AND ARE SUBJECT TO THE PROPRIETARY RIGHTS OF THE GOVERNMENT.

NAPEC DRAWING NO. 1288 SHEET 2 OF 10 B

REVISIONS							
ZONE	LTR	DESCRIPTION	DATE	APPROVAL			
3	H	AS DELETE 24 & 25	1-79				
3C	B	1 WAS HINGE PIN 1/2 ⌀ X 4-1/2 L COAT/ANTI-SEIZE LOCTITE #67	3-79	AM			

ITEM	DESCRIPTION	REQD	MATL	SIZE	REMARKS
27	CONTROL P.B.	1	STD	CUTLER HAMMER VND#10250T NEMA 4 & 13	
26	STAPLE	1	SST	NAPEC 0963-1	GFM
25	DOWEL	1	STD	1/4 DIA X 1" LG.	
24	RINGS	1	SST	SEE DETAIL	
23	SENSOR BODY	1	SST	NAVALEX #284G9P1	GFM
22	TRACK, BOTTOM	1	SST	⊥ 1/4 X 1 X 1 X 38	
21	COUPLING STR.	1	SST	1/2 NPT	
20	ROLL PIN	6	SST	1/4 X 1/2 LG	
19	TRACK TOP	1	SST	⊥ 1/4 X 1 X 1 X 38	
18	ANCHORS	2	STD	3/8-16 X 2	RED HEAD EXPANSION #747
17	STANDOFF	2	SST	SCH #40 X 2 3/8 LG.	
16	HEX HD BOLT	2	SST	3/8-16NC 2 X 4 LG	
15	SPACER	1	SST	⊥ 1/4 X 1 X 1 X 13 1/4	
14	HEX-NUT	4	SST	1/4-20NC-2	LOCKTITE "NUT LOCK" @ ASSY.
13	HEX-HD BOLT	4	SST	1/4-20NC-2 X 1 1/2 LG	
12	STOP BLOCK	4	VIET VALVE	SEE DETAIL	60/90 DUROMETER BLACK
11	STOP PIN	1	SST	3/4 DIA X 3 L	
10	BRACKET	1	SST	SEE DETAIL	
9	TANG	1	SST	SEE DETAIL	
8	SHROUD	1	SST	SEE DETAIL	
7	LOCK & SENSOR	1	SST	SEE DETAIL	
6	MAIN HOUSING	1	SST	SEE DETAIL	
5	HEX-NUT	1	SST	3/4-10 NC-2	LOCKTITE "NUT LOCK" @ ASSY.
4	JACK SCREW	1	SST	NAVALEX DWG #2847140	GFM
3	COVER	1	SST	SEE DETAIL	
2	HEX-NUT	8	SST	3/8-24UNF-2	LOCKTITE GRADE H @ ASSY.
1	CAM FOLLOWER	8	STD	CFA-21-X 3/4 ⌀ X 1/2	SMITH DIV. of ABC GARWOOD N.J.

SYMBOLS: FIRST ANGLE PROJECTION; THIRD ANGLE PROJECTION

PROPRIETARY RIGHTS & SECURITY CLASSIFICATION: DO NOT SCALE THIS DRAWING. UNLESS OTHERWISE SPECIFIED, DIMENSIONS ARE IN INCHES. TOLERANCES: DECIMALS ± .005; FRACTIONS ± 1/64; ANGLES ± 30'. INTERPRET DRAWING PER MIL-STD-100 AND STANDARD PRACTICES IN SELECTED.

SCALE: — SIZE: F

APPROVED: 11-20-78 — MISSLE MAGAZINE HASP

DRAWN: G. SALADE 6/78

CHECKED: G. SALADE 6/78

STOCK LIST

DEPARTMENT OF THE NAVY
NAVAL SEA SYSTEMS COMMAND
NAVAL AMMUNITION PRODUCTION ENGINEERING CENTER
CRANE, INDIANA

NAPEC DRAWING NO. 1288 SHEET 2 OF 10 B

REVISIONS				
SYMB	LTR	DESCRIPTION	DATE	APPROVAL
GH	A	CONDUIT HOLE REMOVED	1/79	

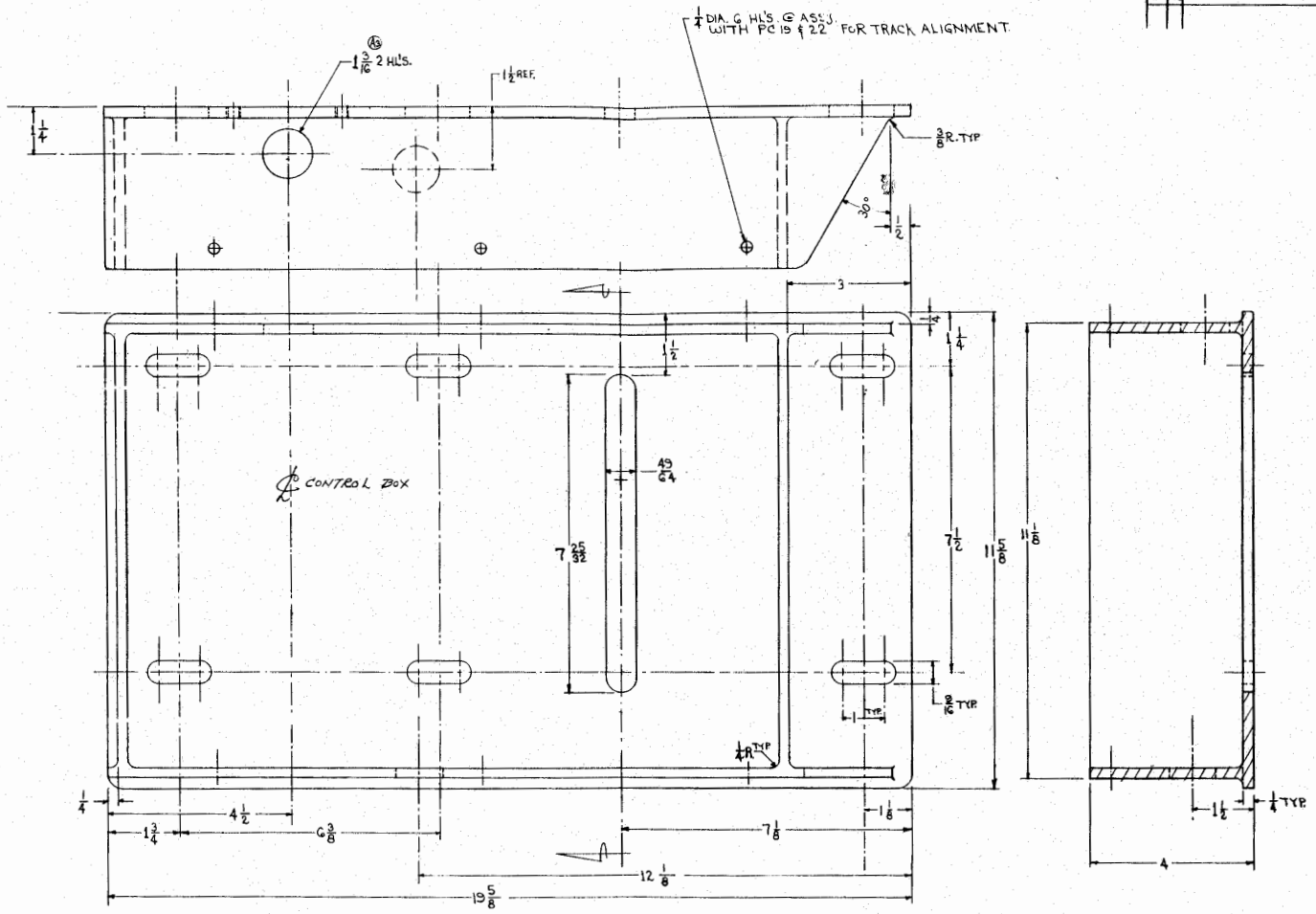

(G) MAIN HOUSING
CAST STAINLESS 316 (CF8M)
* .005 IN./IN. GENERAL TOLERANCE

SCALE 1:1	F	MISSLE MOTOR MAGAZINE HASP	DEPARTMENT OF THE NAVY NAVAL SEA SYSTEMS COMMAND NAVAL AMMUNITION PRODUCTION ENGINEERING CENTER GRANT, INDIANA
		MAIN HOUSING DETAIL	NAPEC DRAWING NO. 1288 SHEET 3 OF 10 — A

NAPEC 1288 SHEET 3 OF 10 — A

REVISIONS					
3G	AG	ADDED LOCK CLEARANCE	1/79		

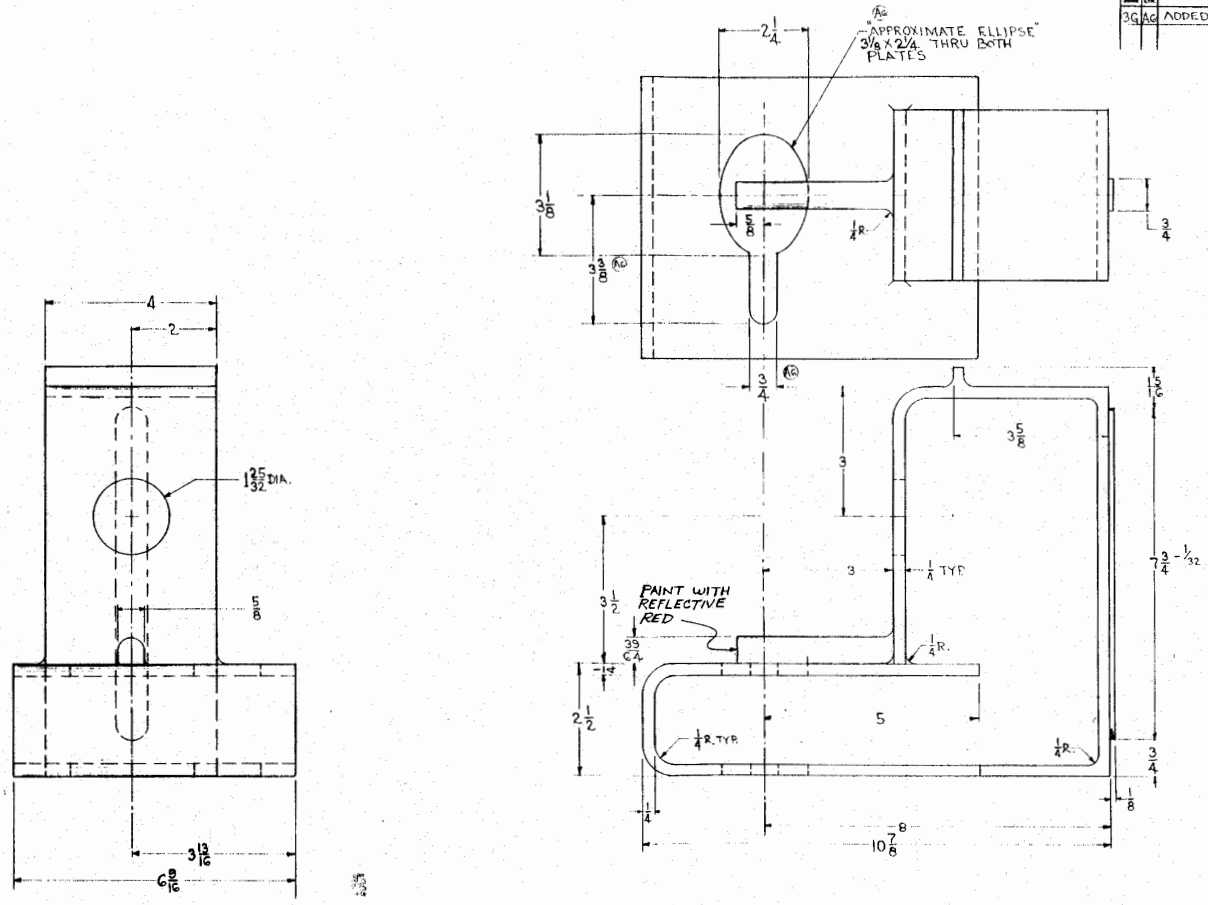

(7) LOCK & SENSOR HOUSING
CAST STAINLESS 316 (CF8M)
*.005 IN./IN GENERAL TOLERANCE

SCALE 1:1	SIZE F	G.J. SALLADE 5/78	MISSLE MOTOR MAGAZINE HASP
			LOCK & SENSOR HOUSING

DEPARTMENT OF THE NAVY
NAVAL SEA SYSTEMS COMMAND
NAVAL AMMUNITION PRODUCTION ENGINEERING CENTER
CRANE, INDIANA

NAPEC DRAWING NO. 1288
SHEET 4 OF 10

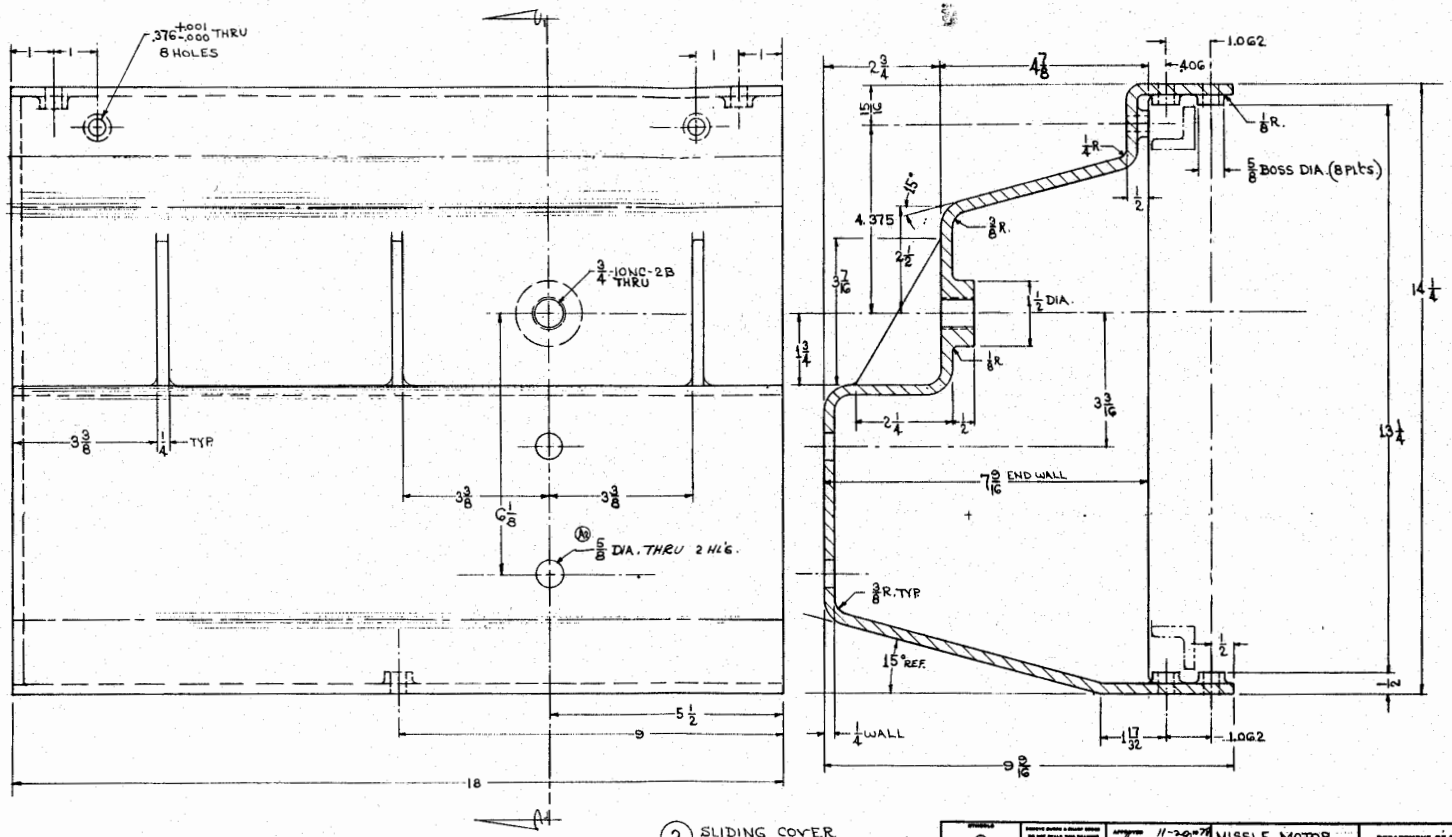

(3) SLIDING COVER
CAST STAINLESS 316 (CF8M)
*.005 IN/IN GENERAL TOLERANCE

APPROVED 11-20-79	MISSLE MOTOR MAGAZINE HASP	DEPARTMENT OF THE NAVY NAVAL SEA SYSTEMS COMMAND NAVAL AMMUNITION PRODUCTION ENGINEERING CENTER OSAWA, HAWAII	
DRAWN J. BALLADE 5/78	SLIDING COVER DETAIL	NAPEC DRAWING NO. 1288 SHEET 5 OF 10	A
SCALE 1:1			

REVISIONS: C5 A2 ADDED VIEW PORT 1/79

NAPEC 1288 SHEET 5 OF 10 A

NOTICE: THE INFORMATION HERE SHOWN IS THE PROPERTY OF THE NAVY AND MUST NOT BE REPRODUCED OR DISCLOSED WITHOUT PERMISSION.

REVISIONS				
ZONE	LTR.	DESCRIPTION	DATE	APPROVAL
	A1	REDRAWN	1-79	

NAPEC DRAWING NO. 1288 SHEET 6 OF 10 LATEST REVISION A

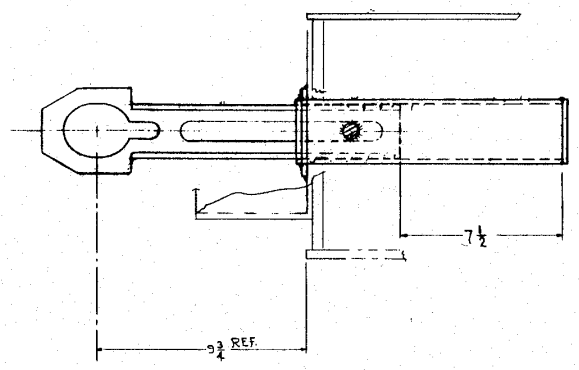

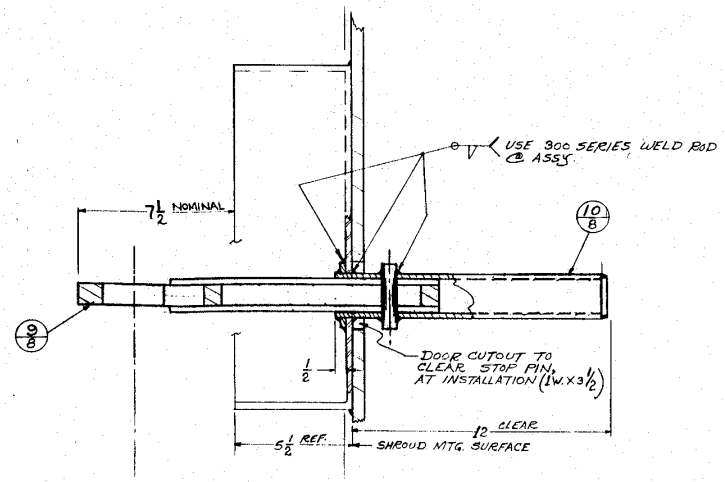

SYMBOLS: FIRST; THIRD; FIRST EXCLUDED; THIRD EXCLUDED

UNLESS OTHERWISE SPECIFIED DIMENSIONS ARE IN INCHES. TOLERANCES: DECIMALS ± .005; FRACTIONS ± 1/64; ANGLES ± 30 MIN. REFERENCE DIMENSIONS ARE NOT SUBJECT TO INSPECTION. DO NOT SCALE THIS DRAWING. UNLESS OTHERWISE SPECIFIED DIMENSIONS AND TOLERANCES PER MIL-STD-100.

SCALE 1:2 SIZE F

APPROVED: G. Salvade 1/79

NAMES	DATE
DRAWN	
DESIGNED	
CHECKED	
ENGINEER	
SUPERV.	
SUBCONT.	
PROJECT	

MISSLE/MOTOR MAGAZINE LOCKING SYSTEM

TANG & SLEEVE ASSY LAYOUT

DEPARTMENT OF THE NAVY
NAVAL SEA SYSTEMS COMMAND
NAVAL AMMUNITION PRODUCTION ENGINEERING CENTER
CRANE, INDIANA

NAPEC DRAWING NO. 1288 SHEET 6 OF 10 LATEST REVISION A

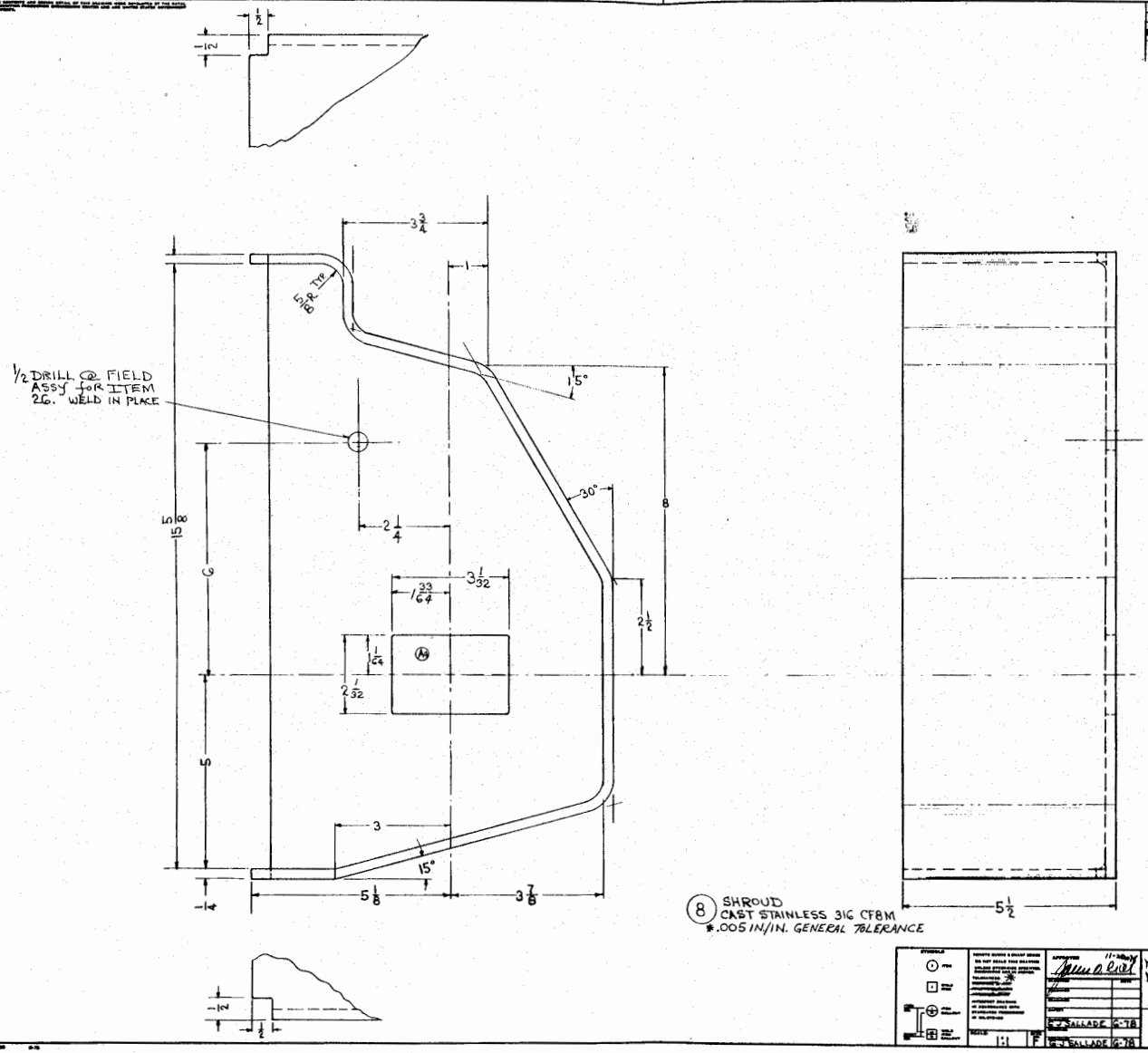

(8) SHROUD
CAST STAINLESS 316 CF8M
*.005 IN/IN. GENERAL TOLERANCE

REVISIONS					
ZONE	LTR	DESCRIPTION	DATE	APPROVED	
6C	A4	ENLARGED HOLE FOR SLEEVE	1-79		
7F	A8	ADDED HOLE for # 26			

NAPEC DRAWING NO. 1288 SHT 7 OF 10 A

MISSLE / MOTOR MAGAZINE, HASP.

SHROUD

DEPARTMENT OF THE NAVY
NAVAL SEA SYSTEMS COMMAND
NAVAL AMMUNITION PRODUCTION ENGINEERING CENTER
CRANE, INDIANA

NAPEC DRAWING NO. 1288
SHEET 7 OF 10
A

SCALE 1:1

G. J. BALLADE 6-78
G. J. BALLADE 6-78

NOTICE: THE DRAWINGS AND SHEETS SUPPLIED BY THE NAVAL SEA SYSTEMS COMMAND ARE DEVELOPED BY THE NAVAL AMMUNITION PRODUCTION ENGINEERING CENTER AND ARE UNDER NAVAL SEA SYSTEMS COMMAND CONTROL.

NAPEC 1288 SHEET 8 of 10

REVISIONS					
ZONE	LTR	DESCRIPTION	DATE	APPROVED	
	A	THIS SHEET REDRAWN	1/79		

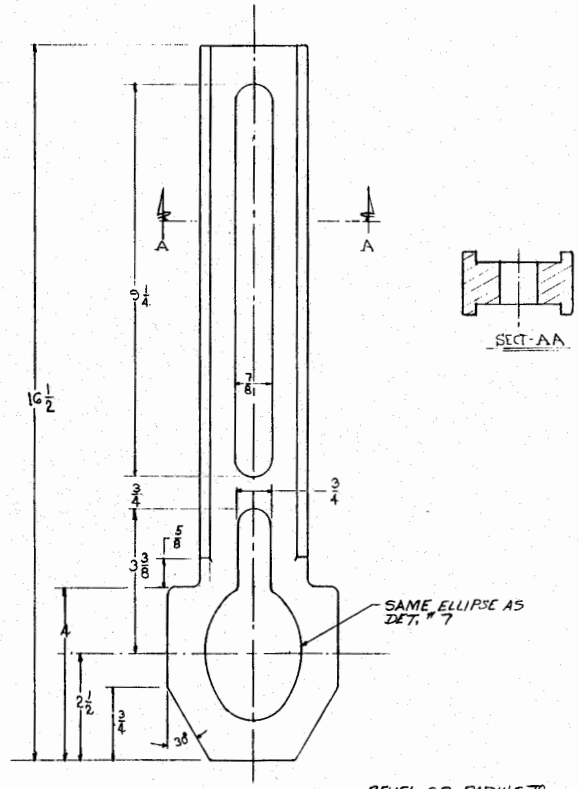

SECT-AA

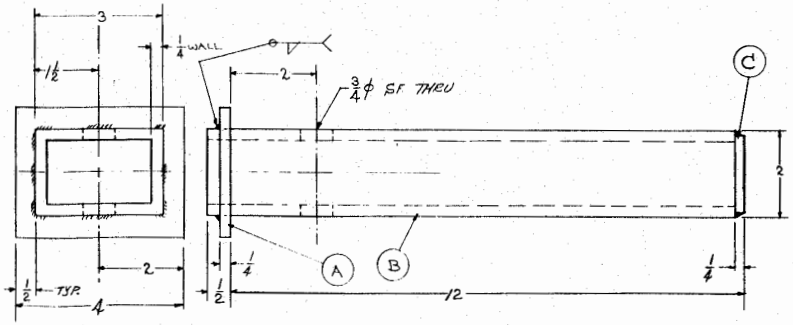

(10) SLEEVE ASSY. WELDMENT

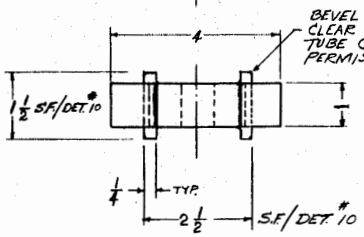

(9) TANG CAST 316 CF8M

LET	NAME	REQ'D	MATL	SIZE
C	CAP	1	HRS	1/4 X 1 3/4 X 2 3/4
B	SLEEVE	1	ASTM A-500	2 X 3 X 1/4 X 12 1/4
A	FLANGE	1	HRS	1/4 X 3 X 4

UNLESS OTHERWISE SPECIFIED: DO NOT SCALE THIS DRAWING. UNLESS OTHERWISE DIMENSIONED, ALL DIMENSIONS ARE IN INCHES. TOLERANCES: DECIMALS ± .005, FRACTIONS ± 1/64, ANGLES ± 0°30'. ATTENTION: ADHERENCE TO SPECIFICATIONS, DRAWINGS OR OTHER DOCUMENTS IS MANDATORY.

SCALE 1:1 | F | G.J. SALVADE 1-79

MISSLE/MOTOR MAGAZINE LOCKING SYSTEM.

DETAILS

DEPARTMENT OF THE NAVY
NAVAL SEA
SYSTEMS COMMAND
NAVAL AMMUNITION PRODUCTION ENGINEERING CENTER
CRANE, INDIANA

NAPEC DRAWING NO. 1288 SHEET 8 OF 10 | A

NOTICE: THE INFORMATION AND DESIGN DETAILS ON THIS DRAWING ARE PROPRIETARY TO THE NATIVE COMPANY. THEY ARE NOT TO BE COPIED OR USED FOR ANY OTHER PURPOSE WITHOUT PERMISSION.

NAPEC 1288 SHEET 9 OF 10 A

REVISIONS				
ZONE	LTR	DESCRIPTION	DATE	APPROVED
	A5	DET 24 OMITTED		

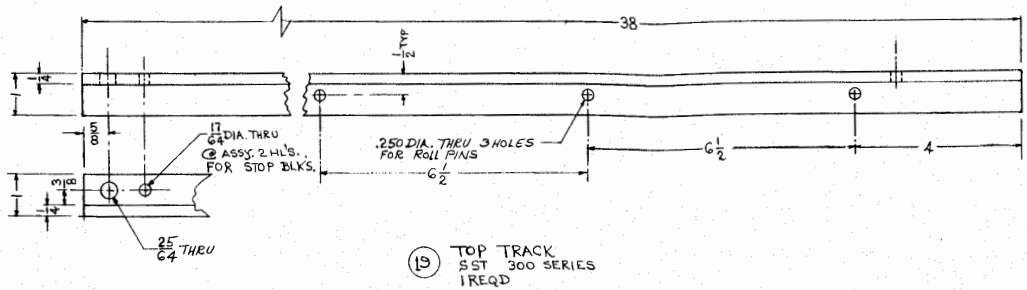

(19) TOP TRACK
SST 300 SERIES
1 REQ'D

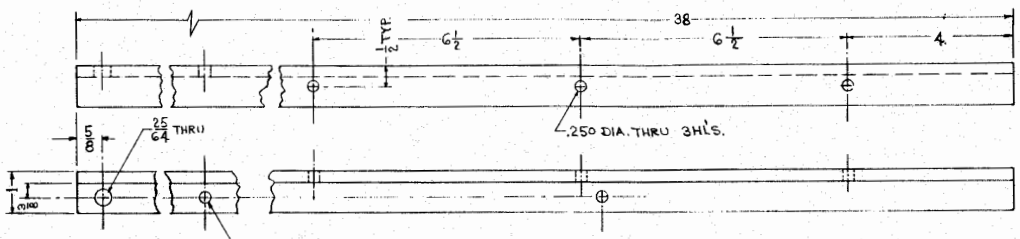

(22) LOWER TRACK
SST 300 SERIES
1 REQ'D.

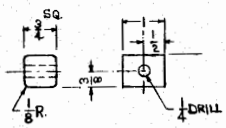

(12) STOP BLOCK 4 REQ'D.
NEOPRENE OR URETHANE
60/90 DUROMETER

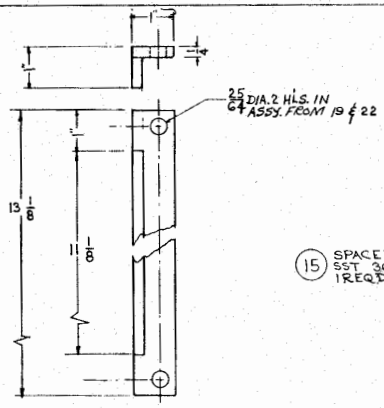

(15) SPACER
SST 300 SERIES
1 REQ'D.

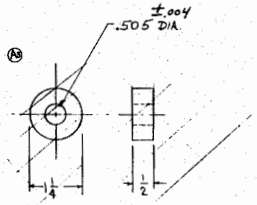

(24) RINGS
STAINLESS STEEL 316
CAST OR BAR STOCK
1 REQ'D

APPROVED 11-30-77	MISSLE/MOTOR MAGAZINE LOCKING SYSTEM	DEPARTMENT OF THE NAVY NAVAL ORD SYSTEMS COMMAND NAVAL AMMUNITION PRODUCTION ENGINEERING CENTER CRANE, INDIANA	
SALLADE 6-78	TRACK DETAILS	NAPEC DRAWING NO. 1288	SHEET 9 OF 10
SCALE 1:1			A

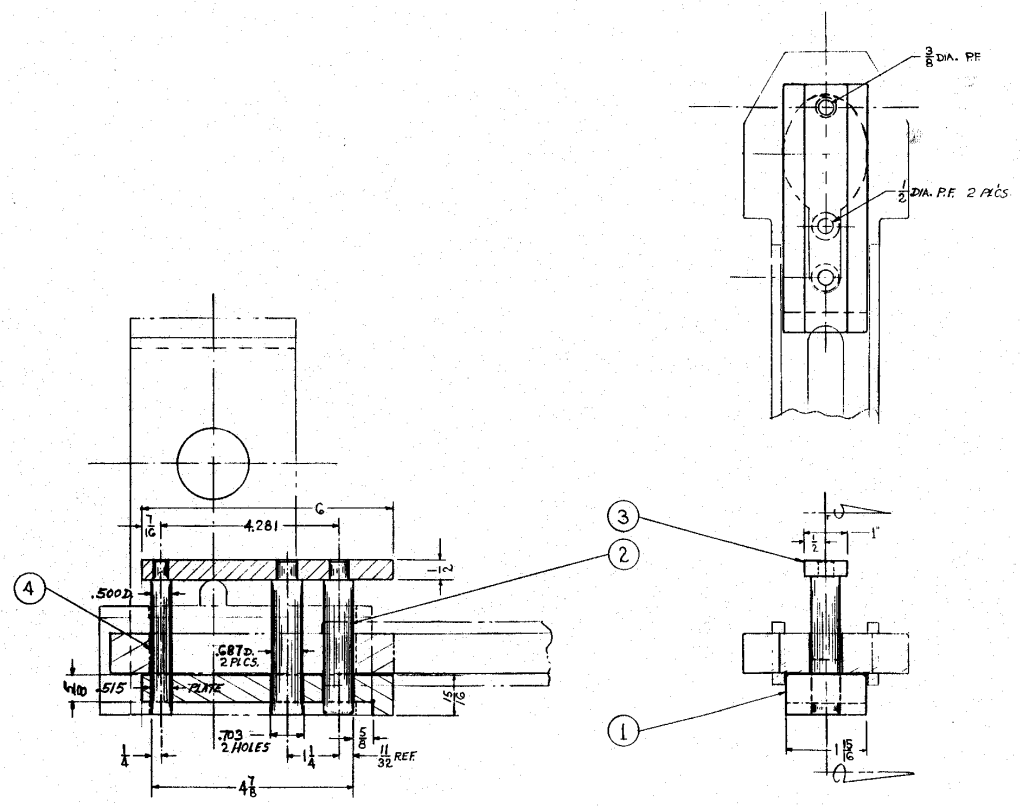

ITEM	NOMENCLATURE	REQ'D	MATL	REMARKS
4	PIN	1	D.R.	1/2 ϕ X 4 LG.
3	PIN PL 1/2 X 1 X G 1/4	1	C.R.S.	CAD. PL OR BLK. OXIDE
2	PIN	2	D.R.	1/16 ϕ X 4" LG.
1	SPACER 1X2XG 1/4	1	C.R.S.	CAD. PL. OR BLK. OXIDE

NOTE

MISSLE MOTOR MAGAZINE HASP ALIGNMENT FIXTURE (SHROUD ASSY. TO DOOR)

DEPARTMENT OF THE NAVY
NAVAL SEA SYSTEMS COMMAND
NAVAL AMMUNITION PRODUCTION ENGINEERING CENTER
CRANE, INDIANA

NAPEC DRAWING NO. 1288
SHEET 10 OF 10

SCALE 1:1 SIZE F

G.S. SALVADE 7/79

NAPEC DRAWING NO. 1288 SHEET 10 OF 10

NOTICE: THE CONTENTS AND DRAWING DETAIL OF THIS DRAWING ARE DEVELOPED BY THE NAVAL AMMUNITION PRODUCTION ENGINEERING CENTER AND NAVAL SEA SYSTEMS COMMAND, WASHINGTON.

NAPEC DRAWING 1294 SHEET 1 OF 3

REVISIONS					
SYMB	LTR	DESCRIPTION	DATE	APPROVAL	
	A	[illegible] TO [illegible]	[illegible]	[illegible]	
	B	SEE NOR 12948	12-84	[illegible]	

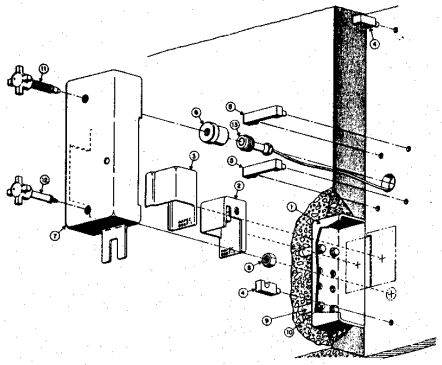

LIST OF MATERIALS				
GEM	ITEM	QTY	DESCRIPTION	NAVAL/COMM'L DESIG
	1	1	WALL MOUNTING BOX	NAPEC DWG 1286
	2	1	CLASP	5532334 SHT2
	3	1	COVER	5532334 SHT2
	4	2	AIB STAPLE	5532336 SHT2
	5	2	AIB LUG	5532336 SHT2
	6	1	SENSOR BODY	5532336 SHT5
	7	1	AIB HOUSING	5532336 SHT2
	8	1	HOLD DOWN NUT	5532336 SHT3
	9	4	1/2" CONCRETE ANCHOR	
	10	4	1/2" HEX HD CAP SCREW	
	11	1	BAR JACK SCREW, INACTIVE LEAF	5532336 SHT3
	12	1	BAR JACK SCREW, ACTIVE LEAF	5532336 SHT4
	13	1	SENSOR	5532336 SHT5

(B)

NOTES:
1. HIGH SECURITY HASP INSTALLATION HEIGHT IS INTENDED TO BE OPERATOR CONVENIENT FOR STRUCTURES WITH A DOCK OR APRON GREATER THAN TWO (2) INCHES BELLOW THE BOTTOM OF THE DOOR. THE HEIGHT DIMENSION SPECIFIED SHOULD BE MEASURED FROM THE SURFACE OF THE DOCK OR APRON IN LIEU OF THE BOTTOM OF THE DOOR.
2. USE WELDING ROD 310-16, 3/32 DIA.

(B)

STEP 1

IMPLANT WALL MOUNTING BOX IN JAMB AND SECURE WITH 1/2" CONCRETE ANCHORS.

NOTCH DOOR FOR CLEARANCE.

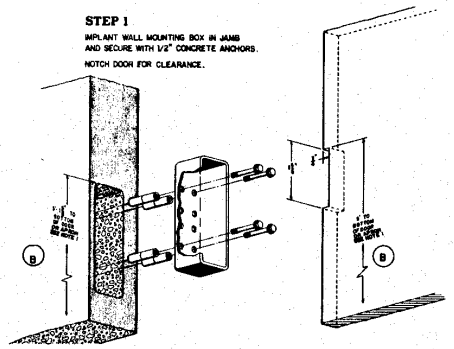

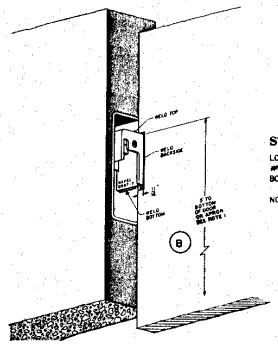

STEP 2

LOCATE AND WELD CLASP #0957-2 TO WALL MOUNTING BOX.

NOTE: FOR INSIDE SWINGING DOORS REPLACE 0957-2 WITH 0958-1.

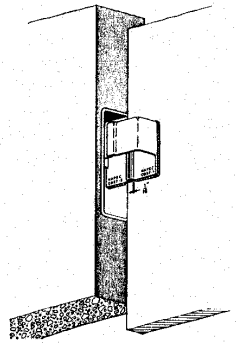

STEP 3

LOCATE HASP COVER 0957-1 ON DOOR FACE AND WELD.

NOTE: FOR INSIDE SWINGING DOORS REPLACE 0957-1 WITH 0958-2.

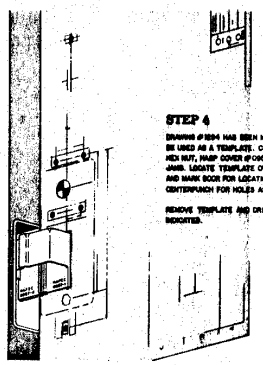

STEP 4

DRAWING #1294 HAS BEEN MADE TO BE USED AS A TEMPLATE. CUT AROUND HEX NUT, HASP COVER #0957-1 AND ALONG JAMB. LOCATE TEMPLATE OVER HASP COVER AND MARK DOOR FOR LOCATING HEX NUT. CENTERPUNCH FOR HOLES AS MARKED.

REMOVE TEMPLATE AND DRILL HOLES AS INDICATED.

B	B	A
1	2	3
REVISION STATIS OF SHEETS		

(B)

SYMBOLS: WELD ON / WELD ON / FIELD WELD / FIELD WELD ASSEMBLY

REMOVE BURRS & SHARP EDGES DO NOT SCALE THIS DRAWING UNLESS OTHERWISE SPECIFIED DIMENSIONS ARE IN INCHES

SCALE: NONE SIZE F

		DATE
APPROVED	[illegible]	3-5-79
DESIGN		DATE
DRAWN		
TRACED		
CHECKED		
ENGINEER	KROH	3-79
MANAGER		

HIGH SECURITY HASP AND AIB INSTALLATION FOR SINGLE DOORS A SLIDING RIGHT TO OPEN

INSTALLATION PROCEDURES

DEPARTMENT OF THE NAVY
NAVAL SEA SYSTEMS COMMAND
NAVAL AMMUNITION PRODUCTION ENGINEERING CENTER
CRANE, INDIANA

NAPEC DRAWING NO. 1294

SHEET 1 OF 3

SIZE F

NOTICE: THE DESIGNS AND DATA DETAIL OF THIS DRAWING WERE DEVELOPED BY THE NAVAL AMMUNITION PRODUCTION ENGINEERING CENTER AND SHOULD THEREFORE BE CONSIDERED PROPRIETARY.

NAPEC 1294 SHEET 2 OF 3

REVISIONS				
ZONE	LTR	DESCRIPTION	DATE	APPROVED
	A	(Lines) To 1.75	9-79	
	B	SEE NOR 12948	11/1/	

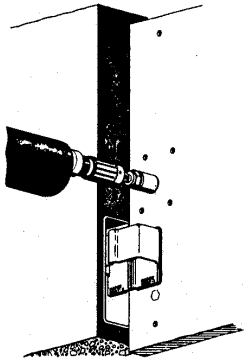

STEP 5

CENTERPUNCH AND DRILL .250 DIA. THRU. ENLARGE HOLE TO 1-3/4" (44 MM) WITH A HOLE SAW EQUIPPED WITH A .250 PILOT.

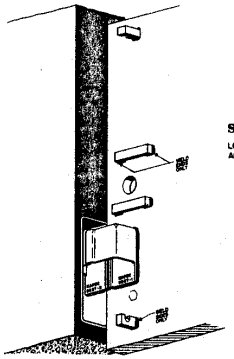

STEP 6

LOCATE LUGS AND STAPLES AND WELD IN PLACE.

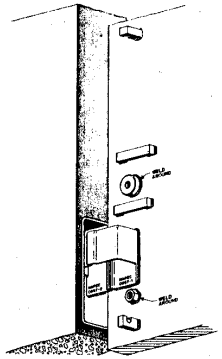

STEP 7

INSERT SENSOR BODY AND WELD IN PLACE.

LOCATE HOLD DOWN NUT AND WELD TO DOOR.

STEP 8

AIB MODIFICATION TO COVER HASP.

NOTE: CUT JAMB SIDE OF AIB ONLY.

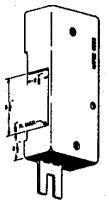

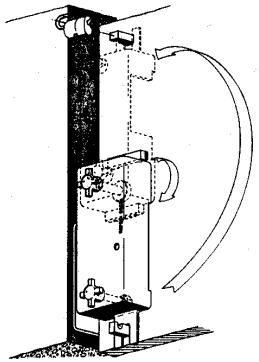

STEP 9

AIB INSTALLED IN SECURE POSITION MINUS LOCK. SENSOR SCREW KNOBS ARE SCREWED DOWN SNUG. TO PLACE AIB IN STORE POSITION, ROTATE AIB COVER 180° AND SECURE TO TOP STAPLE WITH LOCK.

APPROVED	3-5-79	HIGH SECURITY HASP AND AIB INSTALLATION FOR SINGLE DOORS SLIDING RIGHT TO OPEN	DEPARTMENT OF THE NAVY NAVAL SEA SYSTEMS COMMAND NAVAL AMMUNITION PRODUCTION ENGINEERING CENTER CRANE, INDIANA
DRAWN	3/79		
CHECKED	3-79	INSTALLATION PROCEDURES	NAPEC DRAWING NO. 1294
SCALE	SIZE F		SHEET 2 OF 3

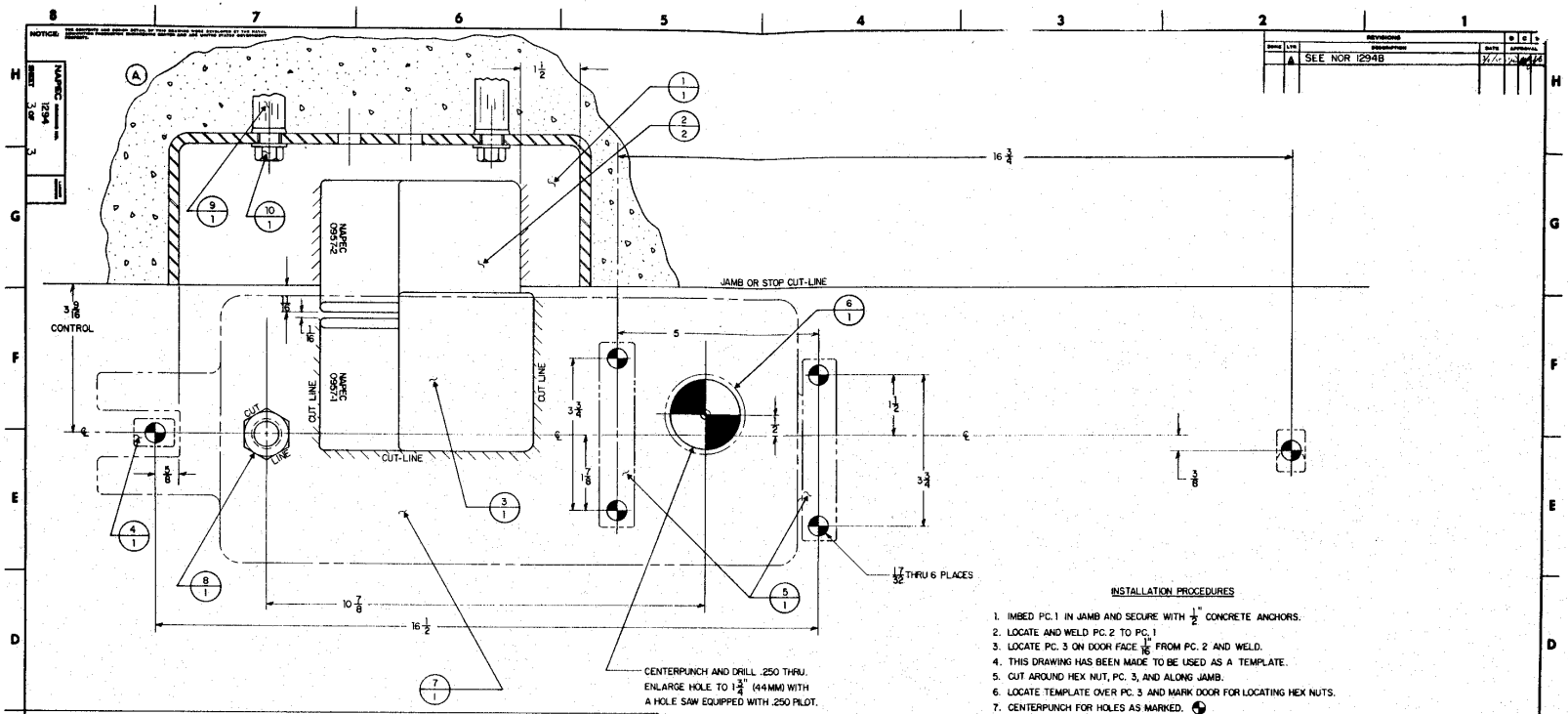

INSTALLATION PROCEDURES

1. IMBED PC. 1 IN JAMB AND SECURE WITH 1/2" CONCRETE ANCHORS.
2. LOCATE AND WELD PC. 2 TO PC. 1
3. LOCATE PC. 3 ON DOOR FACE 1/16" FROM PC. 2 AND WELD.
4. THIS DRAWING HAS BEEN MADE TO BE USED AS A TEMPLATE.
5. CUT AROUND HEX NUT, PC. 3, AND ALONG JAMB.
6. LOCATE TEMPLATE OVER PC. 3 AND MARK DOOR FOR LOCATING HEX NUTS.
7. CENTERPUNCH FOR HOLES AS MARKED.
8. REMOVE TEMPLATE AND DRILL ALL HOLES AS INDICATED.
9. LOCATE PCS. 4 & 5 AND WELD IN PLACE.
10. INSERT PC. 6 AND WELD IN PLACE.
11. WELD PC. 8 TO DOOR.

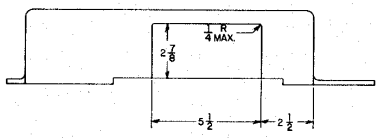

A1B MODIFICATION TO COVER HASP

NOTE: CUT JAMB SIDE OF A1B ONLY

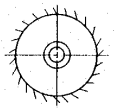

SENSOR BODY

STAPLE

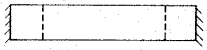

LUG

TYPICAL WELDING PLAN

NOTES:

1. THIS DRAWING IS USABLE FOR RIGHT-HAND HINGED DOORS SWINGING OUT.
2. PCS. 2 & 3 CAN BE REPLACED WITH PCS. NAPEC DWG. 0958 ITEMS 1 & 2 RESPECTIVELY FOR RIGHT-HAND HINGED DOORS SWINGING IN.
3. PCS. 4, 5, 6 & 7 SHOWN IN PHANTOM FOR CLARITY.

ITEM	NOMENCLATURE	MAT'L.	NO. REQ'D	REMARKS
10	1/2" HEX HD. CAP SCREW	STD.	2	
9	1/2" CONCRETE ANCHOR	STD.	2	
8	3/4-10 HEX NUT	SS	1	
7	A1B HOUSING 5532336	304SS	1	SEE DETAIL
6	SENSOR BODY	304SS	1	SEE NOTE 3
5	A1B LUG (STD) 5532336	304SS	2	SEE NOTE 3
4	A1B STAPLE (STD) 5532336	304SS	2	SEE NOTE 3
3	MK 2 MOD B RH HASP PC #0957-1	CA6NM	1	SEE NOTE 2
2	MK 2 MOD B RH HASP PC #0957-2	CA6NM	1	SEE NOTE 2
1	WALL MOUNTING BOX NAPEC DWG. 1286	316SS	1	

(A)

REVISIONS

SYMB	LTR	DESCRIPTION	DATE	APPROVAL
	A	SEE NOR 1294B		

HIGH SECURITY HASP AND A1B INSTALLATION FOR SINGLE DOORS SLIDING RIGHT TO OPEN

INSTALLATION DETAILS

DEPARTMENT OF THE NAVY
NAVAL SEA SYSTEMS COMMAND
NAVAL AMMUNITION PRODUCTION ENGINEERING CENTER
CRANE, INDIANA

NAPEC DRAWING NO. 1294

SHEET 3 OF 3

SCALE FULL

SIZE E

DRAWN R.B.G.H. 3-79

NAPEC 1294 SHEET 3 OF 3

REVISIONS					
ZONE	LTR.	DESCRIPTION	DATE	APPROVAL	
A 1	A	CHANGE TO TITLE	9-77		
E 5	B	ADDED NOTES 1 & 2	10-82		
	C	SEE NOR 1295C			

NAPEC DRAWING 1295 SHT 3

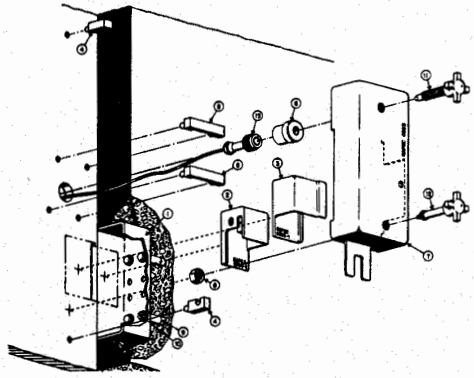

LIST OF MATERIALS

ITEM	QTY	DESCRIPTION	NAVAL/COMM'L DESIG	
1	1	WALL MOUNTING BOX	NAPEC DWG 1286	
2	1	CLASP	5532335	SHT2
3	1	COVER	5532335	SHT2
4	2	AIB STAPLE	5532336	SHT2
5	2	AIB LUG	5532336	SHT2
6	1	SENSOR BODY	5532336	SHT5
7	1	AIB HOUSING	5532336	SHT2
8	1	HOLD DOWN NUT	5532336	SHT3
9	4	1/2" CONCRETE ANCHOR		
10	4	1/2" HEX HD CAP SCREW		
11	1	BAR JACK SCREW, INACTIVE LEAF	5532336	SHT3
12	1	BAR JACK SCREW, ACTIVE LEAF	5532336	SHT4
13	1	SENSOR	5532336	SHT5

(C)

NOTES:
1. HIGH SECURITY HASP INSTALLATION HEIGHT IS INTENDED TO BE OPERATOR CONVENIENT. FOR STRUCTURES WITH A DOCK OR APRON GREATER THAN TWO (2) INCHES BELOW THE BOTTOM OF THE DOOR, THE HEIGHT DIMENSION SPECIFIED SHOULD BE MEASURED FROM THE SURFACE OF THE DOCK OR APRON IN LIEU OF THE BOTTOM OF THE DOOR.
2. USE WELDING ROD 310-16, 3/32 DIA.

STEP 1

IMPLANT WALL MOUNTING BOX IN JAMB AND SECURE WITH 1/2" CONCRETE ANCHORS.

NOTCH DOORS FOR CLEARANCE.

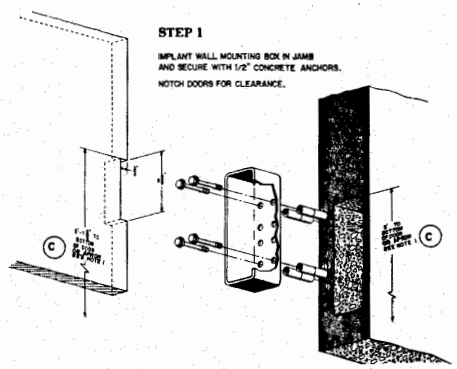

STEP 2

LOCATE AND WELD CLASP #0958-2 TO WALL MOUNTING BOX.

NOTE. FOR INSIDE SWINGING DOORS REPLACE #0958-2 WITH #0957-1.

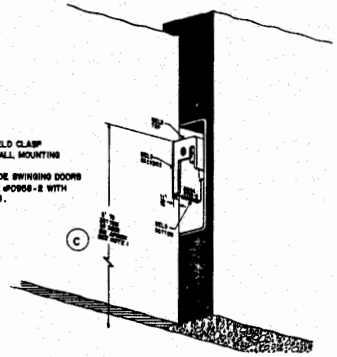

STEP 3

LOCATE HASP COVER #0958-1 ON DOOR FACE AND WELD.

NOTE: FOR INSIDE SWINGING DOORS REPLACE #0958-1 WITH #0957-2.

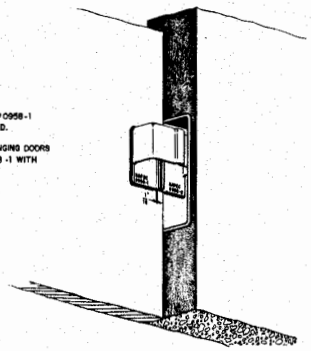

STEP 4

DRAWING #1295 HAS BEEN MADE TO BE USED AS A TEMPLATE. CUT AROUND HEX NUT, HASP COVER #0958-1 AND ALONG JAMB. LOCATE TEMPLATE OVER HASP COVER AND MARK DOOR FOR LOCATING HEX NUT. CENTERPUNCH FOR HOLES AS MARKED.

REMOVE TEMPLATE AND DRILL HOLES AS INDICATED.

C	C	A
1	2	3

REVISION STATUS OF SHEETS

(C)

APPROVED	3-5-77	DATE
DRAWN		DATE
DESIGNED		
DESIGNED	3/77	
CHECKED		
APPROVED	BROH 3-79	
ENGINEER		
ENGINEER		

SCALE: NONE

HIGH SECURITY HASP AND AIB INSTALLATION FOR SINGLE DOORS (A) SLIDING LEFT TO OPEN

INSTALLATION PROCEDURES

DEPARTMENT OF THE NAVY
NAVAL SEA SYSTEMS COMMAND
NAVAL AMMUNITION PRODUCTION ENGINEERING CENTER
CRANE, INDIANA

NAPEC DRAWING NO. 1295

SHEET 1 OF 3

NOTICE: THE CONTENTS AND DEPTH DETAILS OF THIS DRAWING ARE DERIVED BY THE NAVAL AMMUNITION PRODUCTION ENGINEERING CENTER.

NAPEC DRAWING 1295 SHEET 2 OF 3

REVISIONS				
SYMB	LTR	DESCRIPTION	DATE	APPROVAL
A 1	A	CHANGE TO TITLE	9-77	
	B	———		
	C	SEE NOR 1298C		

STEP 5

CENTERPUNCH AND DRILL .250 DIA. THRU. ENLARGE HOLE TO 1-3/4" (44 MM) WITH A HOLE SAW EQUIPPED WITH A .250 PILOT.

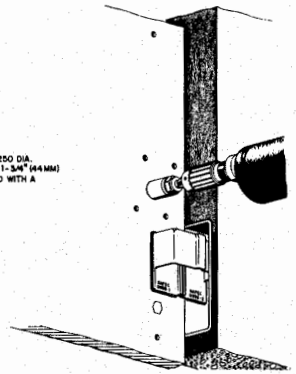

STEP 6

LOCATE LUGS AND STAPLES AND WELD IN PLACE.

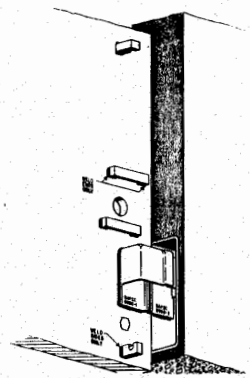

STEP 7

INSERT SENSOR BODY AND WELD IN PLACE.

LOCATE HOLD DOWN NUT AND WELD TO DOOR.

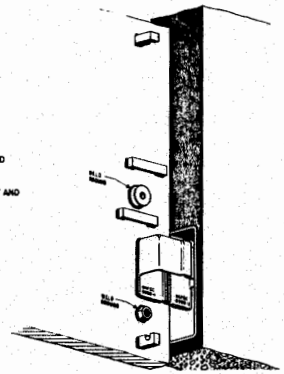

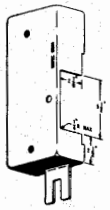

STEP 8

AIB MODIFICATION TO COVER HASP.

NOTE: CUT JAMB SIDE OF AIB ONLY.

STEP 9

AIB INSTALLED IN SECURE POSITION MINUS LOCK. SENSOR SCREW KNOBS ARE SCREWED DOWN SNUG. TO PLACE AIB IN STORE POSITION, ROTATE AIB COVER 180° AND SECURE TO TOP STAPLE WITH LOCK.

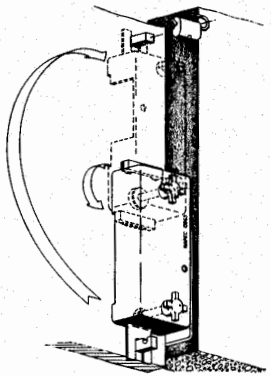

SYMBOLS		
⊙	PIN	
⊡	WELD (TYP)	
⊕	FIELD ASSEMBLY	
⊞	FIELD ASSEMBLY	

SENSOR SWITCH & SENSOR SENSOR DO NOT WELD THE SENSORS UNLESS OTHERWISE SPECIFIED. DIMENSIONS ARE IN INCHES

APPROVED	3-5-79	
		DATE
	9/79	
	SBOH	3-79

HIGH SECURITY HASP AND AIB INSTALLATION FOR SINGLE DOORS (A) SLIDING LEFT TO OPEN

INSTALLATION PROCEDURES

DEPARTMENT OF THE NAVY
NAVAL SEA SYSTEMS COMMAND
NAVAL AMMUNITION PRODUCTION ENGINEERING CENTER
CRANE, INDIANA

NAPEC DRAWING NO. 1295

SHEET 2 OF 3

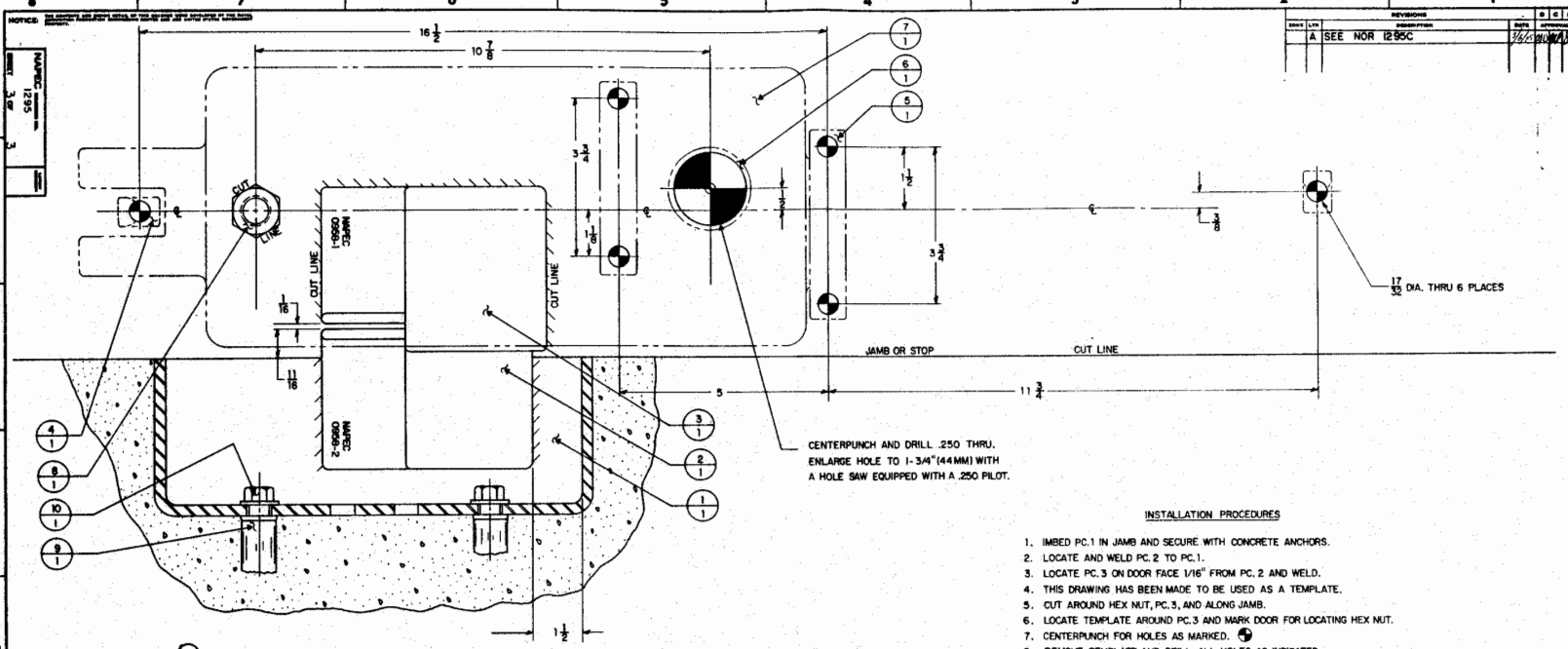

INSTALLATION PROCEDURES

1. IMBED PC.1 IN JAMB AND SECURE WITH CONCRETE ANCHORS.
2. LOCATE AND WELD PC. 2 TO PC.1.
3. LOCATE PC. 3 ON DOOR FACE 1/16" FROM PC. 2 AND WELD.
4. THIS DRAWING HAS BEEN MADE TO BE USED AS A TEMPLATE.
5. CUT AROUND HEX NUT, PC. 3, AND ALONG JAMB.
6. LOCATE TEMPLATE AROUND PC. 3 AND MARK DOOR FOR LOCATING HEX NUT.
7. CENTERPUNCH FOR HOLES AS MARKED.
8. REMOVE TEMPLATE AND DRILL ALL HOLES AS INDICATED.
9. LOCATE PCS. 4 & 5 AND WELD IN PLACE.
10. INSERT PC. 6 AND WELD IN PLACE.
11. WELD PC. 6 TO DOOR.

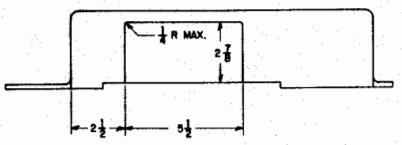

AIB MODIFICATION TO COVER HASP

NOTE: CUT JAMB SIDE OF AIB ONLY

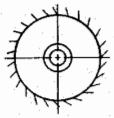

SENSOR BODY

STAPLE

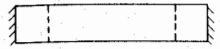

LUG

TYPICAL WELDING PLAN

ITEM	NOMENCLATURE	MAT'L.	NO. REQ'D	REMARKS
10	1/2" HEX HD. CAP SCREW	STD.	2	
9	1/2" CONCRET ANCHOR	STD.	2	
8	3/4-10 HEX NUT	SS	1	
7	AIB HOUSING 5532336	304 SS	1	SEE DETAIL
6	SENSOR BODY	304 SS	1	SEE NOTE 3
5	AIB LUG (STD) 5532336	304 SS	2	SEE NOTE 3
4	AIB STAPLE (STD) 5532336	304 SS	2	SEE NOTE 3
3	MK2 MOD 8 LH HASP PC. #0958-1	CA6NM	1	SEE NOTE 2
2	MK2 MOD 8 LH HASP PC. #0958-2	CA6NM	1	SEE NOTE 2
1	WALL MOUNTING BOX NAPEC DWG. 1286	316 SS	1	

NOTES:

1. THIS DRAWING IS USABLE FOR LEFT-HAND HINGED DOORS SWINGING OUT.
2. PCS. 2 & 3 CAN BE REPLACED WITH PCS. NAPEC DWG. 0957 ITEMS 1 & 2 RESPECTIVELY FOR LEFT-HAND HINGED DOORS SWINGING IN.
3. PCS. 4, 5, 6 & 7 SHOWN IN PHANTOM FOR CLARITY.

REVISIONS			
SYMB	LTR	DESCRIPTION	DATE
	A	SEE NOR 1295C	7/6/79

HIGH SECURITY HASP AND AIB INSTALLATION FOR SINGLE DOORS SLIDING LEFT TO OPEN

INSTALLATION DETAILS

SCALE: FULL

DEPARTMENT OF THE NAVY
NAVAL SEA SYSTEMS COMMAND
NAVAL AMMUNITION PRODUCTION ENGINEERING CENTER
CRANE, INDIANA

NAPEC DRAWING NO. 1295

SHEET 3 OF 3

REVISIONS					
SYMB	LTR	DESCRIPTION	DATE	APPR	TRAL
	A	SEE NOR 1297A			

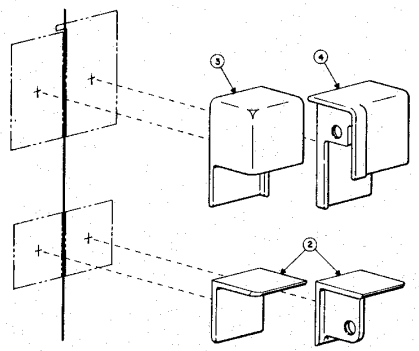

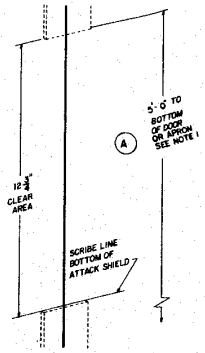

STEP 1

CUT AWAY 12-3/4 INCHES OF ASTRAGAL FROM MAGAZINE DOOR IF ASTRAGAL IS PRESENT.

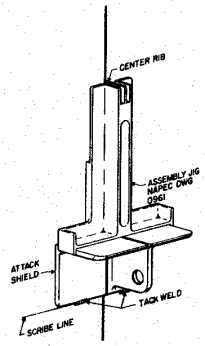

STEP 2

ASSEMBLE ASSEMBLY JIG AND BOTTOM ATTACK SHIELD AND POSITION AS SHOWN WITH THE CENTER RIB OF THE JIG BETWEEN THE TWO DOORS AND THE LOWER EDGE OF THE ATTACK SHIELD ON THE SCRIBED LINE.

TACK WELD ATTACK SHIELD IN PLACE TO APPROPRIATE DOORS.

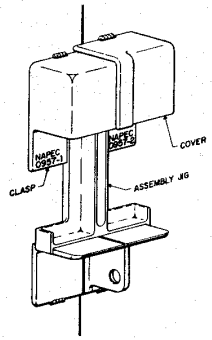

STEP 3

POSITION HASP SECTIONS IN ASSEMBLY JIG AS SHOWN AND TACK WELD IN PLACE

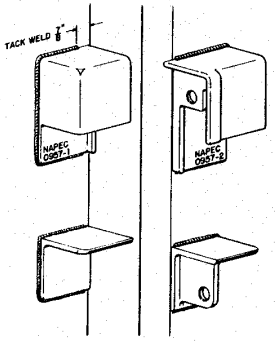

STEP 4

REMOVE ASSEMBLY JIG. OPEN DOOR AND FINISH WELDING.

CAUTION

DO NOT WELD ON DOOR EDGES.

CLOSE DOOR.

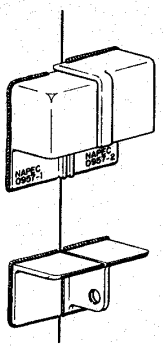

STEP 5

SECURITY HASP AND ATTACK SHIELD INSTALLED.

NOTES:

1. HIGH SECURITY HASP INSTALLATION HEIGHT IS INTENDED TO BE OPERATOR CONVENIENT. FOR STRUCTURES WITH A DOCK OR APRON GREATOR THAN TWO (2) INCHES BELOW THE BOTTOM OF THE DOOR, THE HEIGHT DIMENSION SPECIFIED SHOULD BE MEASURED FROM THE SURFACE OF THE DOCK OR APRON IN LIEU OF THE BOTTOM OF THE DOOR. (A)
2. USE WELDING ROD 310-16, 3/32 DIA.

LIST OF MATERIALS

GFM	ITEM	QTY	DESCRIPTION	NAVAL/COMM'L DESIG	
	2	1	BOTTOM ATTACK SHIELD	5532334	SHT 3
	3	1	CLASP	5532334	SHT 2
	4	1	COVER	5532334	SHT 2

(A)

STANDARD PLAN-INSTALLATION DETAIL FOR RIGHT HAND ACTIVE DOORS USING HIGH SECURITY HASP #0957	DEPARTMENT OF THE NAVY NAVAL SEA SYSTEMS COMMAND NAVAL AMMUNITION PRODUCTION ENGINEERING CENTER CRANE, INDIANA	
INSTALLATION PROCEDURES	NAPEC DRAWING NO. 1297 SHEET OF	

DATE 3-5-79 · 9/79 · RBOH 3-79

NAPEC 1297 SHEET OF

NOTICE: [illegible]

REVISIONS				
SYMB	LTR	DESCRIPTION	DATE	APPROVAL
	A	SEE NOR 1298 A	3/79	[illegible]

NAPEC 1298 SHEET 1 OF 1

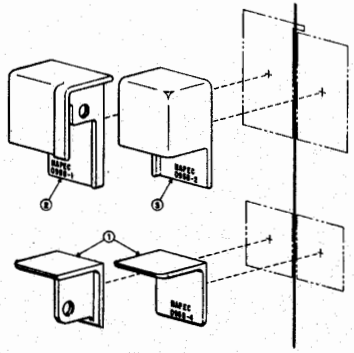

STEP 1

CUT AWAY 12-3/4 INCHES OF ASTRAGAL FROM MAGAZINE DOOR IF ASTRAGAL IS PRESENT.

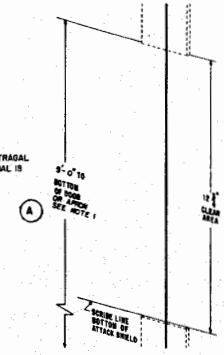

STEP 2

ASSEMBLE ASSEMBLY JIG AND BOTTOM ATTACK SHIELD AND POSITION AS SHOWN, WITH THE CENTER RIB OF THE JIG BETWEEN THE TWO DOORS AND THE LOWER EDGE OF THE ATTACK SHIELD ON THE SCRIBED LINE.

TACK WELD ATTACK SHIELD IN PLACE TO APPROPRIATE DOORS.

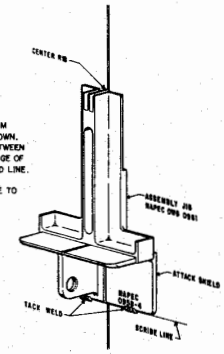

STEP 3

POSITION HASP SECTIONS IN ASSEMBLY JIG AS SHOWN AND TACK WELD IN PLACE.

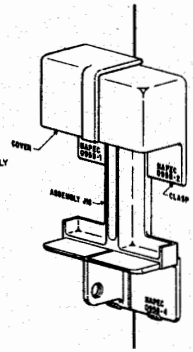

STEP 4

REMOVE ASSEMBLY JIG.

OPEN DOOR AND FINISH WELDING.

CAUTION

DO NOT WELD ON DOOR EDGES.

CLOSE DOOR.

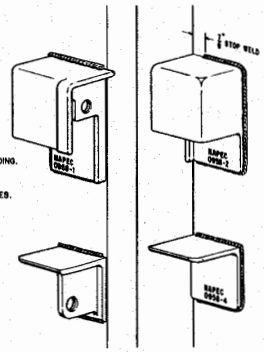

STEP 5

SECURITY HASP AND ATTACK SHIELD INSTALLED.

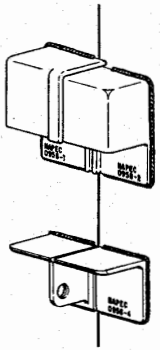

NOTES:

1. HIGH SECURITY HASP INSTALLATION HEIGHT IS INTENDED TO BE OPERATOR CONVENIENT. FOR STRUCTURES WITH A DOCK OR APRON GREATER THAN TWO (2) INCHES BELOW THE BOTTOM OF THE DOOR, THE HEIGHT DIMENSION (A) SPECIFIED SHOULD BE MEASURED FROM THE SURFACE OF THE DOCK OR APRON IN LIEU OF THE BOTTOM OF THE DOOR.
2. USE WELDING ROD 310-16, 3/32 DIA.

LIST OF MATERIALS

GFM	ITEM	QTY	DESCRIPTION	NAVAL/COMM'L. DESIG	
	1	1	BOTTOM ATTACK SHIELD	5532335	SHT 3
	2	1	COVER	5532335	SHT 2
	3	1	CLASP	5532335	SHT 2

(A)

SYMBOLS: FORM; WELD SEAM; FORM BOUNDARY; WELD BOUNDARY

REMOVE BURRS & SHARP EDGES. DO NOT SCALE THIS DRAWING UNLESS STANDARD DIMENSIONS DIMENSIONS ARE IN INCHES

SCALE: NONE

SIZE: F

APPROVED: [illegible] 2-5-79

		DATE
DRAWN		
DESIGNED		
MANUFACTURE	[illegible]	3/79
SUPERV.		
SUBMITTED	KRGH	3-79
PROJECT		
MANAGER		

STANDARD PLAN-
INSTALLATION DETAIL FOR
LEFT HAND ACTIVE DOORS
USING HIGH SECURITY
HASP # 0958

INSTALLATION PROCEDURES

DEPARTMENT OF THE NAVY
NAVAL OSS
SYSTEMS COMMAND
NAVAL AMMUNITION PRODUCTION ENGINEERING CENTER
CRANE, INDIANA

NAPEC DRAWING NO. 1298
SHEET 1 OF 1

NOTICE: THE INFORMATION AND DESIGN DETAILS ON THIS DRAWING WERE DEVELOPED BY THE NAVAL AMMUNITION PRODUCTION ENGINEERING CENTER.

NAVPEC 1302 SHEET 1 OF 3

REVISIONS						
ZONE	LTR	DESCRIPTION	DATE	APPROVAL		
C 7	A	1 STEP 2 REVISED. WAS DRILL JIG DWG 0964 2,3 & 4 SEE SHEET 3	10-79	AA		
E 5 F 3	B	ADDED NOTES 1&2 WAS SHEET 4	10-82	JF		
	C	SEE NOR 1302 C				

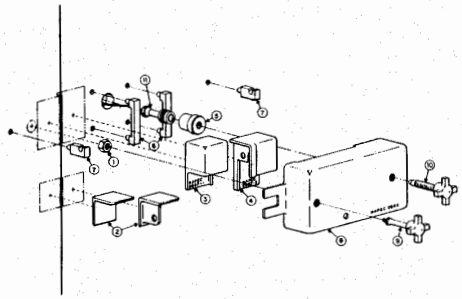

(C)

LIST OF MATERIALS

GFM	ITEM	QTY	DESCRIPTION	NAVAL/COMM'L DESIG		
	1	1	HOLD-DOWN NUT	5532336	SHT 3	
	2	1	BOTTOM ATTACK SHIELD	5532334	SHT 3	(C)
	3	1	CLASP	5532334	SHT 2	
	4	1	COVER	5532334	SHT 2	
	5	1	JACK SCREW BUSHING (SENSOR BODY)	5532336	SHT 5	(B)
	6	2	A I B LUG	5532336	SHT 2	
	7	2	A I B STAPLE	5532336	SHT 2	
	8	1	A I B HOUSING	5532336	SHT 2	
	9	1	BAR JACK SCREW, INACTIVE LEAF	5532336	SHT 3	
	10	1	BAR JACK SCREW, ACTIVE LEAF	5532336	SHT 4	
	11	1	SENSOR	5532336	SHT 5	(B)

NOTES:

1. HIGH SECURITY HASP INSTALLATION HEIGHT IS INTENDED TO BE OPERATOR CONVENIENT. FOR STRUCTURES WITH A DOCK OR APRON GREATER THAN TWO (2) INCHES BELOW THE BOTTOM OF THE DOOR, THE HEIGHT DIMENSION SPECIFIED SHOULD BE MEASURED FROM THE SURFACE OF THE DOCK OR APRON IN LIEU OF THE BOTTOM OF THE DOOR.
2. USE WELDING ROD 310-16, 3/32 DIA.

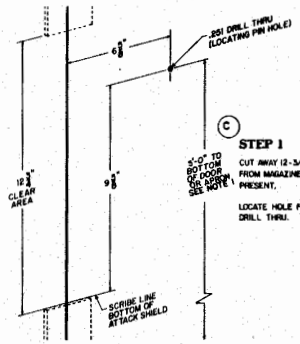

(C)

STEP 1

CUT AWAY 12-3/4 INCHES OF ASTRAGAL FROM MAGAZINE DOOR IF ASTRAGAL IS PRESENT.

LOCATE HOLE FOR LOCATING PIN AND DRILL THRU.

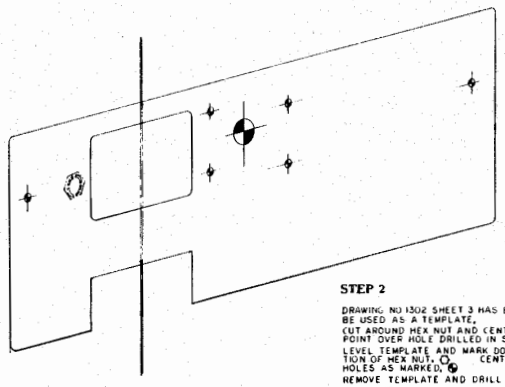

STEP 2

DRAWING NO 1302 SHEET 3 HAS BEEN MADE TO BE USED AS A TEMPLATE.
CUT AROUND HEX NUT AND CENTER LOCATOR POINT OVER HOLE DRILLED IN STEP ONE (1).
LEVEL TEMPLATE AND MARK DOOR FOR LOCATION OF HEX NUT, ⊙. CENTER PUNCH HOLES AS MARKED, ⊕.
REMOVE TEMPLATE AND DRILL HOLES AS INDICATED.

(C)

C	-	B
1	2	3
REVISION	STATUS OF SHEETS	

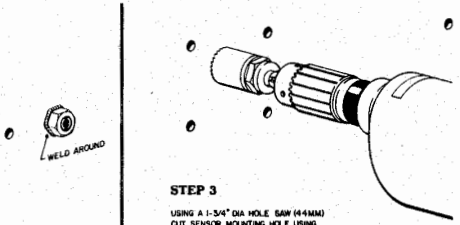

STEP 3

USING A 1-3/4" DIA HOLE SAW (44MM) CUT SENSOR MOUNTING HOLE USING LOCATOR PIN HOLE FOR CENTER.

FINISH WELD HOLD DOWN NUT TO DOOR.

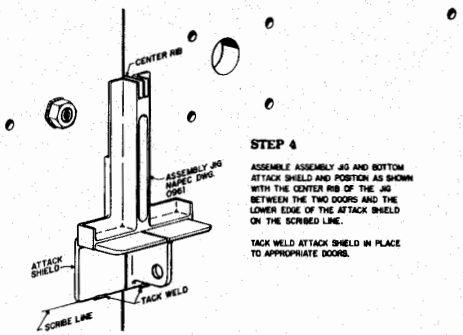

STEP 4

ASSEMBLE ASSEMBLY JIG AND BOTTOM ATTACK SHIELD AND POSITION AS SHOWN WITH THE CENTER RIB OF THE JIG BETWEEN THE TWO DOORS AND THE LOWER EDGE OF THE ATTACK SHIELD ON THE SCRIBED LINE.

TACK WELD ATTACK SHIELD IN PLACE TO APPROPRIATE DOORS.

SYMBOLS		APPROVED 3-5-79	STANDARD PLAN – ANTI-INTRUSION BAR INSTALLATION DETAIL FOR RIGHT HAND ACTIVE DOORS USING HIGH SECURITY HASP #0957
		DRAWN RADH 3-79	INSTALLATION PROCEDURES
SCALE:	REV:		

DEPARTMENT OF THE NAVY
NAVAL SEA SYSTEMS COMMAND
NAVAL AMMUNITION PRODUCTION ENGINEERING CENTER
CRANE, INDIANA

NAPEC DRAWING NO. 1302
SHEET 1 OF 3

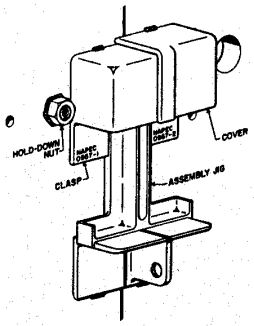

STEP 5

POSITION HASP SECTIONS IN ASSEMBLY JIG AS SHOWN AND TACK WELD IN PLACE.

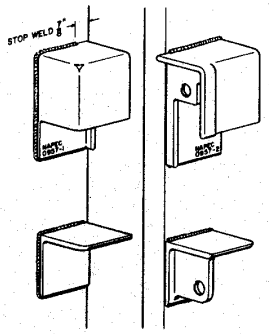

STEP 6

REMOVE ASSEMBLY JIG.

OPEN DOOR AND FINISH WELDING.

CAUTION

DO NOT WELD ON DOOR EDGES.

CLOSE DOOR.

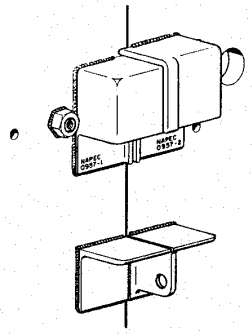

STEP 7

SECURITY HASP AND ATTACK SHIELD INSTALLED.

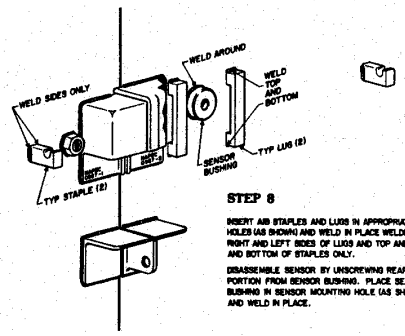

STEP 8

INSERT AIB STAPLES AND LUGS IN APPROPRIATE HOLES (AS SHOWN) AND WELD IN PLACE WELDING RIGHT AND LEFT SIDES OF LUGS AND TOP AND AND BOTTOM OF STAPLES ONLY.

DISASSEMBLE SENSOR BY UNSCREWING REAR PORTION FROM SENSOR BUSHING. PLACE SENSOR BUSHING IN SENSOR MOUNTING HOLE (AS SHOWN) AND WELD IN PLACE.

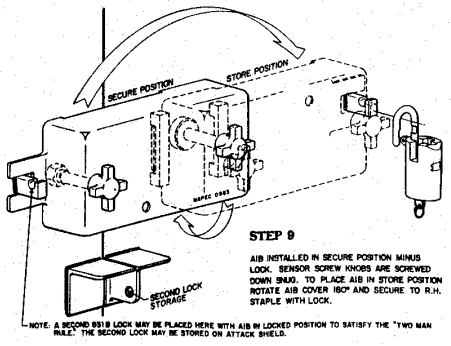

STEP 9

AIB INSTALLED IN SECURE POSITION MINUS LOCK. SENSOR SCREW KNOBS ARE SCREWED DOWN SNUG. TO PLACE AIB IN STORE POSITION ROTATE AIB COVER 180° AND SECURE TO R.H. STAPLE WITH LOCK.

NOTE: A SECOND 5915 LOCK MAY BE PLACED HERE WITH AIB IN LOCKED POSITION TO SATISFY THE "TWO MAN RULE". THE SECOND LOCK MAY BE STORED ON ATTACK SHIELD.

SYMBOLS	REMOVE BURRS & SHARP EDGES	APPROVED 3-5-79	STANDARD PLAN – ANTI-INTRUSION BAR INSTALLATION DETAIL FOR RIGHT HAND ACTIVE DOORS USING HIGH SECURITY HASP #0957
	DO NOT SCALE THIS DRAWING UNLESS OTHERWISE APPROVED. DIMENSIONS ARE IN INCHES.	DRAWN GROH 3-79	INSTALLATION PROCEDURES
SCALE:	SIZE F		

DEPARTMENT OF THE NAVY
NAVAL SEA SYSTEMS COMMAND
NAVAL AMMUNITION PRODUCTION ENGINEERING CENTER
CRANE, INDIANA

NAPEC DRAWING NO. 1302

SHEET 2 OF 3

NOTICE: THE CONTENTS AND DESIGN DETAIL OF THIS DRAWING WERE DEVELOPED BY THE NAVAL AMMUNITION PRODUCTION ENGINEERING CENTER AND ARE NAVAL SYSTEM INFORMATION CONTENT.

NAPEC DRAWING NO. 1302 SHEET 3 OF 3

REVISIONS						
SYMB	LTR	DESCRIPTION	DATE	APPROVAL		
F7	A	2 CUT LINES ADDED				
		3 LOCATING HOLES FOR 3/4 HEX NUT AND SLOTS FOR 3/8 Ø BASE SWIVEL PAD ADDED	10-79	AA		
E2		4 9/16 Ø WAS .500 Ø				
	B	SEE NOR 1302C				

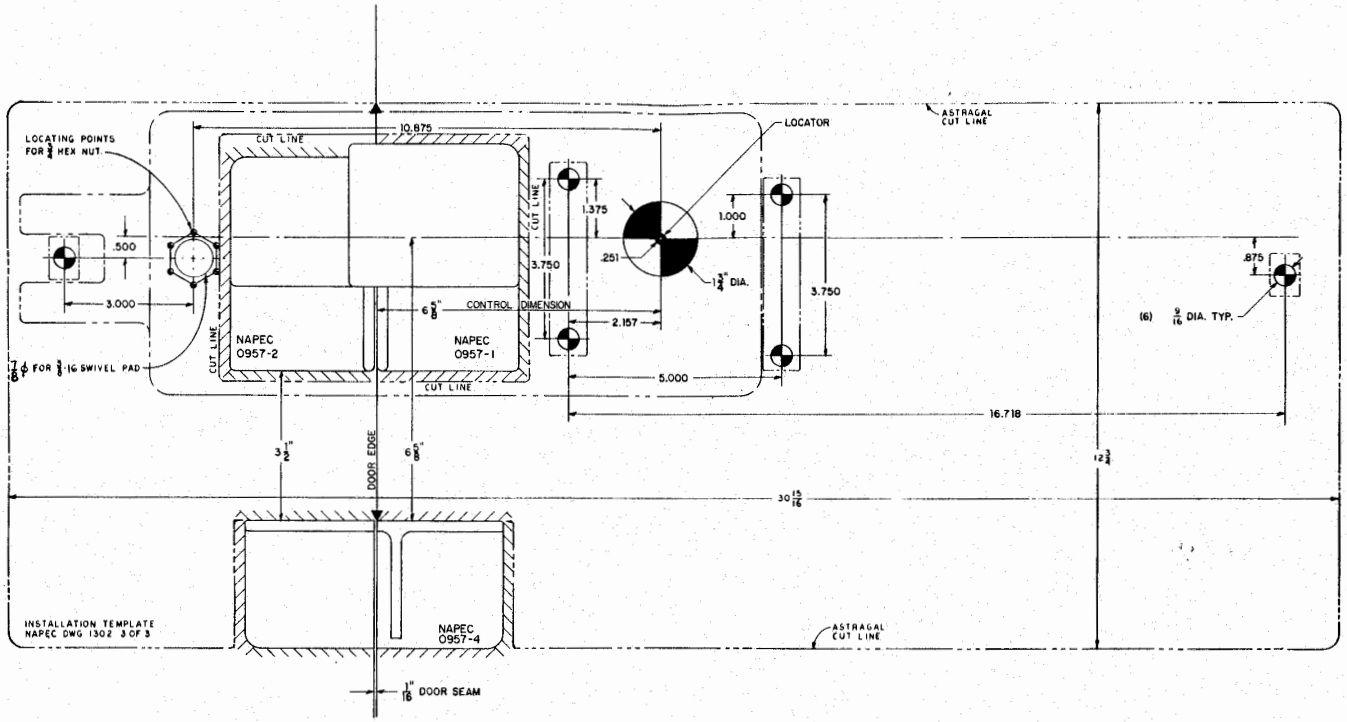

STANDARD PLAN – ANTI-INTRUSION BAR INSTALLATION DETAIL FOR RIGHT HAND ACTIVE DOORS USING HIGH SECURITY HASP # 0957	DEPARTMENT OF THE NAVY NAVAL SEA SYSTEMS COMMAND NAVAL AMMUNITION PRODUCTION ENGINEERING CENTER CRANE, INDIANA		
HASP & AIB INSTALLATION TEMPLATE	NAPEC DRAWING NO. 1302	SHEET 3 OF 3	

APPROVED 5-5-79

NOTICE: [illegible]

REVISIONS						
SHEET	LTR.	DESCRIPTION	DATE	APPROVAL		
C 2	A	1. STEP 2 REVISED, WAS DRILL JIG DWG 1093 2. 3 & 4 SEE SHEET 3	10-79	AA	AW	
E 5	B	ADDED NOTES 1 & 2	10-82	JF		
	C	SEE NOR 1303C	5/1/-	[illegible]	[illegible]	[illegible]

NAVSEC 1303 SHEET 1 OF 3

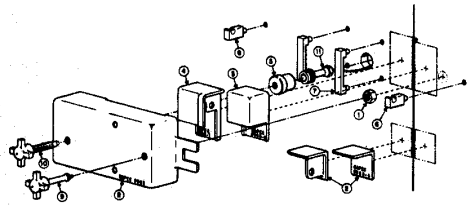

LIST OF MATERIALS

GFM	ITEM	QTY	DESCRIPTION	NAVAL/COMM'L DESIG	
	1	1	HOLD-DOWN NUT	5532336	SHT 3
	2	1	BOTTOM ATTACK SHIELD	5532335	SHT 5
	3	1	CLASP	5532335	SHT 2
	4	1	COVER	5532335	SHT 2
	5	1	JACK SCREW BUSHING (SENSOR BODY)	5532336	SHT 5
	6	2	A I B LUG	5532336	SHT 2
	7	2	A I B STAPLE	5532336	SHT 2
	8	1	A I B HOUSING	5532336	SHT 2
	9	1	BAR JACK SCREW, INACTIVE LEAF	5532336	SHT 3
	10	1	BAR JACK SCREW, ACTIVE LEAF	5532336	SHT 4
	11	1	SENSOR	5532336	SHT 5

(C)

NOTES:

1. HIGH SECURITY HASP INSTALLATION HEIGHT IS INTENDED TO BE OPERATOR CONVENIENT. FOR STRUCTURES WITH A DOCK OR APRON GREATER THAN TWO (2) INCHES BELOW THE BOTTOM OF THE DOOR, THE HEIGHT DIMENSION SPECIFIED SHOULD BE MEASURED FROM THE SURFACE OF THE DOCK OR APRON IN LIEU OF THE BOTTOM OF THE DOOR.
2. USE WELDING ROD 310-16, 3/32 DIA.

(C)

STEP 1

CUT AWAY 12-3/4 INCHES OF ASTRAGAL FROM MAGAZINE DOOR IF ASTRAGAL IS PRESENT.

LOCATE HOLE FOR LOCATING PIN AND DRILL THRU.

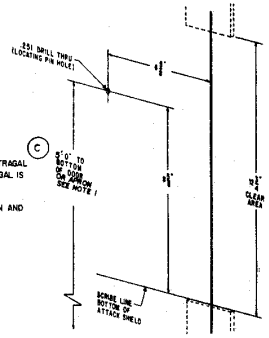

(C)

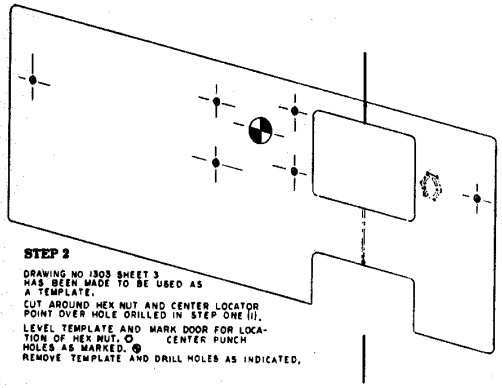

STEP 2

DRAWING NO 1303 SHEET 3 HAS BEEN MADE TO BE USED AS A TEMPLATE.

CUT AROUND HEX NUT AND CENTER LOCATOR POINT OVER HOLE DRILLED IN STEP ONE (1).

LEVEL TEMPLATE AND MARK DOOR FOR LOCATION OF HEX NUT. ⊙ CENTER PUNCH HOLES AS MARKED. ⊕
REMOVE TEMPLATE AND DRILL HOLES AS INDICATED.

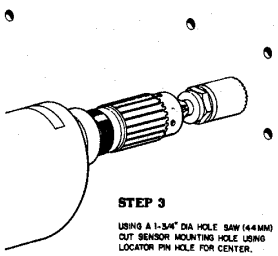

STEP 3

USING A 1-3/4" DIA HOLE SAW (44 MM) CUT SENSOR MOUNTING HOLE USING LOCATOR PIN HOLE FOR CENTER.

FINISH WELD HOLD-DOWN NUT TO DOOR.

STEP 4

ASSEMBLE ASSEMBLY JIG AND BOTTOM ATTACK SHIELD AND POSITION AS SHOWN WITH THE CENTER RIB OF THE JIG BETWEEN THE TWO DOORS AND THE LOWER EDGE OF THE ATTACK SHIELD ON THE SCRIBED LINE.

TACK WELD ATTACK SHIELD IN PLACE TO APPROPRIATE DOORS.

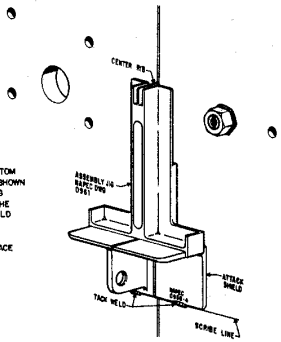

C	-	B
1	2	3
REVISION STATUS OF SHEETS		

(C)

SYMBOLS: TOP; HOLD DOWN; TOP RAILROAD; HOLD DOWN RAILROAD

DRAWING SIZES & DRAWN SCALE DO NOT SCALE THIS DRAWING UNLESS DIMENSIONS INDICATED. DIMENSIONS ARE IN INCHES

SCALE: NONE; SHEET F

APPROVED	3-5-79	
DESIGNED		
DRAWN	3/79	
CHECKED	KACH	3-79
CODE IDENT		

STANDARD PLAN – ANTI-INTRUSION BAR INSTALLATION DETAIL FOR LEFT HAND ACTIVE DOORS USING HIGH SECURITY HASP #0958

INSTALLATION PROCEDURES

DEPARTMENT OF THE NAVY
NAVAL SEA SYSTEMS COMMAND
NAVAL AMMUNITION PRODUCTION ENGINEERING CENTER
CRANE, INDIANA

NAPEC DRAWING NO. 1303
SHEET 1 OF 3

SUPERSEDES

SNSD-010100 6-76

U.S. GOVERNMENT PRINTING OFFICE: 1979-603-549

NOTICE: THE CONTENTS AND DESIGN DETAILS OF THIS DRAWING WERE DEVELOPED BY THE NAVAL AMMUNITION PRODUCTION ENGINEERING CENTER AND ARE UNDER STRICT GOVERNMENT CONTROL.

NAPEC DRAWING NO. 1303 SHEET 2 OF 3

REVISIONS				
ZONE	LTR	DESCRIPTION	DATE	APPROVAL

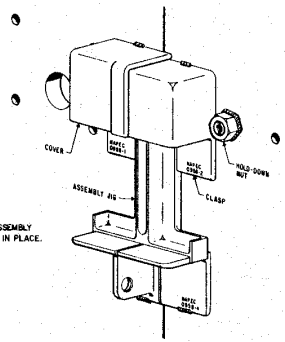

STEP 5

POSITION HASP SECTIONS IN ASSEMBLY JIG AS SHOWN AND TACK WELD IN PLACE.

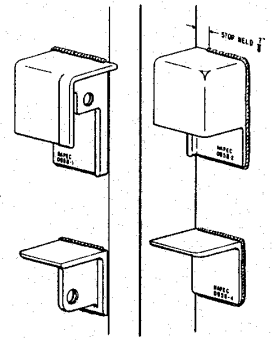

STEP 6

REMOVE ASSEMBLY JIG.

OPEN DOOR AND FINISH WELDING.

CAUTION

DO NOT WELD ON DOOR EDGES.

CLOSE DOOR.

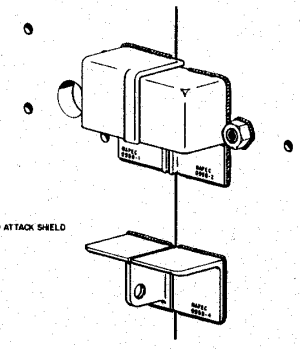

STEP 7

SECURITY HASP AND ATTACK SHIELD INSTALLED.

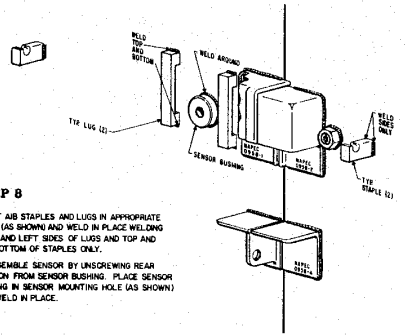

STEP 8

INSERT AIB STAPLES AND LUGS IN APPROPRIATE HOLES (AS SHOWN) AND WELD IN PLACE WELDING RIGHT AND LEFT SIDES OF LUGS AND TOP AND AND BOTTOM OF STAPLES ONLY.

DISASSEMBLE SENSOR BY UNSCREWING REAR PORTION FROM SENSOR BUSHING. PLACE SENSOR BUSHING IN SENSOR MOUNTING HOLE (AS SHOWN) AND WELD IN PLACE.

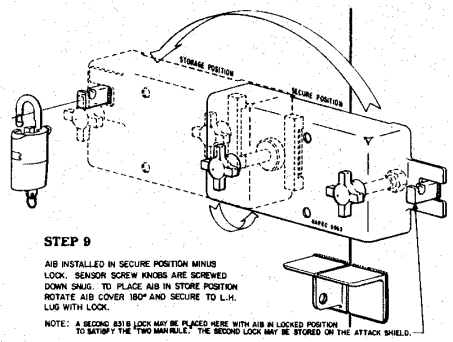

STEP 9

AIB INSTALLED IN SECURE POSITION MINUS LOCK. SENSOR SCREW KNOBS ARE SCREWED DOWN SNUG. TO PLACE AIB IN STORE POSITION ROTATE AIB COVER 180° AND SECURE TO L.H. LUG WITH LOCK.

NOTE: A SECOND 831B LOCK MAY BE PLACED HERE WITH AIB IN LOCKED POSITION TO SATISFY THE "TWO MAN RULE." THE SECOND LOCK MAY BE STORED ON THE ATTACK SHIELD.

APPROVED	3-16-79	STANDARD PLAN – ANTI-INTRUSION BAR INSTALLATION DETAIL FOR LEFT HAND ACTIVE DOORS USING HIGH SECURITY HASP #0958	DEPARTMENT OF THE NAVY NAVAL SEA SYSTEMS COMMAND NAVAL AMMUNITION PRODUCTION ENGINEERING CENTER CRANE, INDIANA
	3/79	INSTALLATION PROCEDURES	NAPEC DRAWING NO. 1303 SHEET 2 OF 3
	3-79		
SCALE:	SIZE F		

NOTICE: THE CONTENTS AND DATA SHOWN ON THIS DRAWING WERE PREPARED BY THE NAVAL AMMUNITION PRODUCTION ENGINEERING CENTER AND ARE UNITED STATES GOVERNMENT PROPERTY.

NAPEC 1303 SHEET 3 OF 3

REVISIONS					
ZONE	LTR	DESCRIPTION	DATE	APPROVAL	
E 2	A	1. CUT LINES ADDED 2. LOCATING HOLES FOR 3/4 HEX NUT AND SLOTS FOR 3/8 Ø BASE SWIVEL PAD ADDED	10-79	AA	
E 7		3. 9/16 Ø WAS 33/64 Ø			
	B	SEE NOR 1303 B	3/12/82		

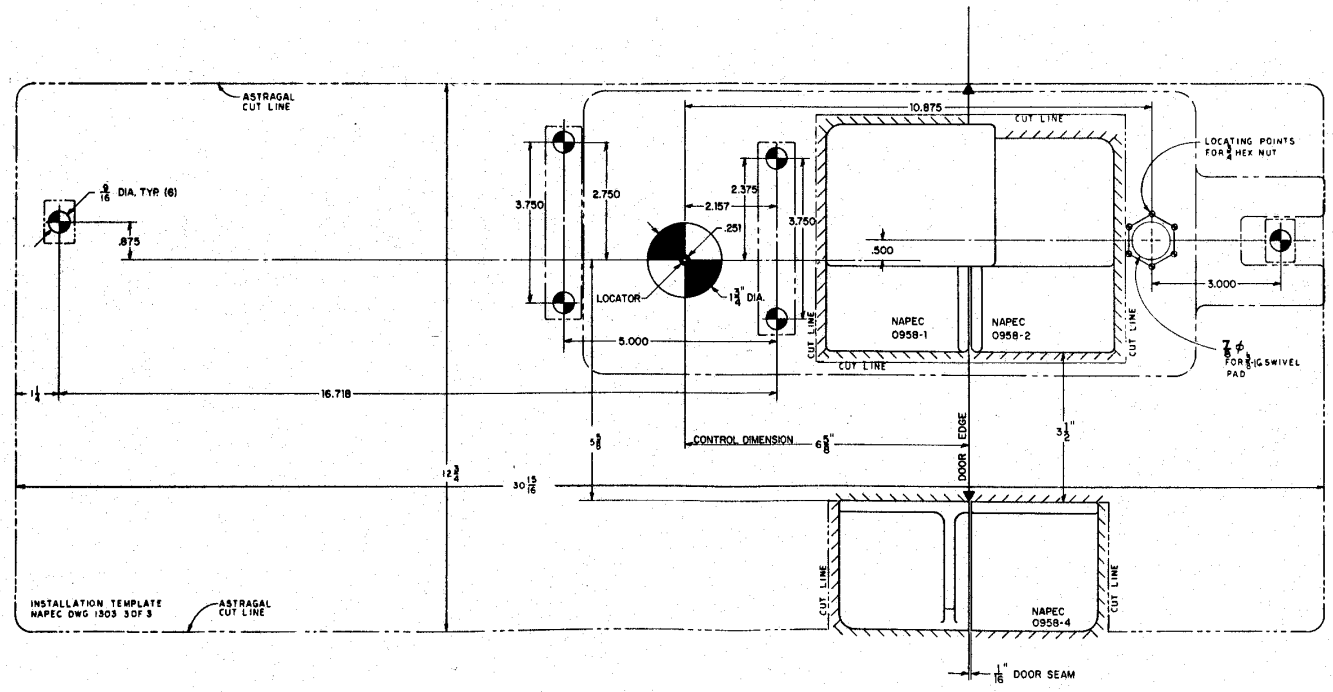

SYMBOLS		STANDARD PLAN – ANTI-INTRUSION BAR INSTALLATION DETAIL FOR LEFT HAND ACTIVE DOORS USING HIGH SECURITY HASP #0958	DEPARTMENT OF THE NAVY NAVAL SEA SYSTEMS COMMAND NAVAL AMMUNITION PRODUCTION ENGINEERING CENTER CRANE, INDIANA
		HASP & AIB INSTALLATION TEMPLATE	NAPEC 1303 SHEET 3 OF 3

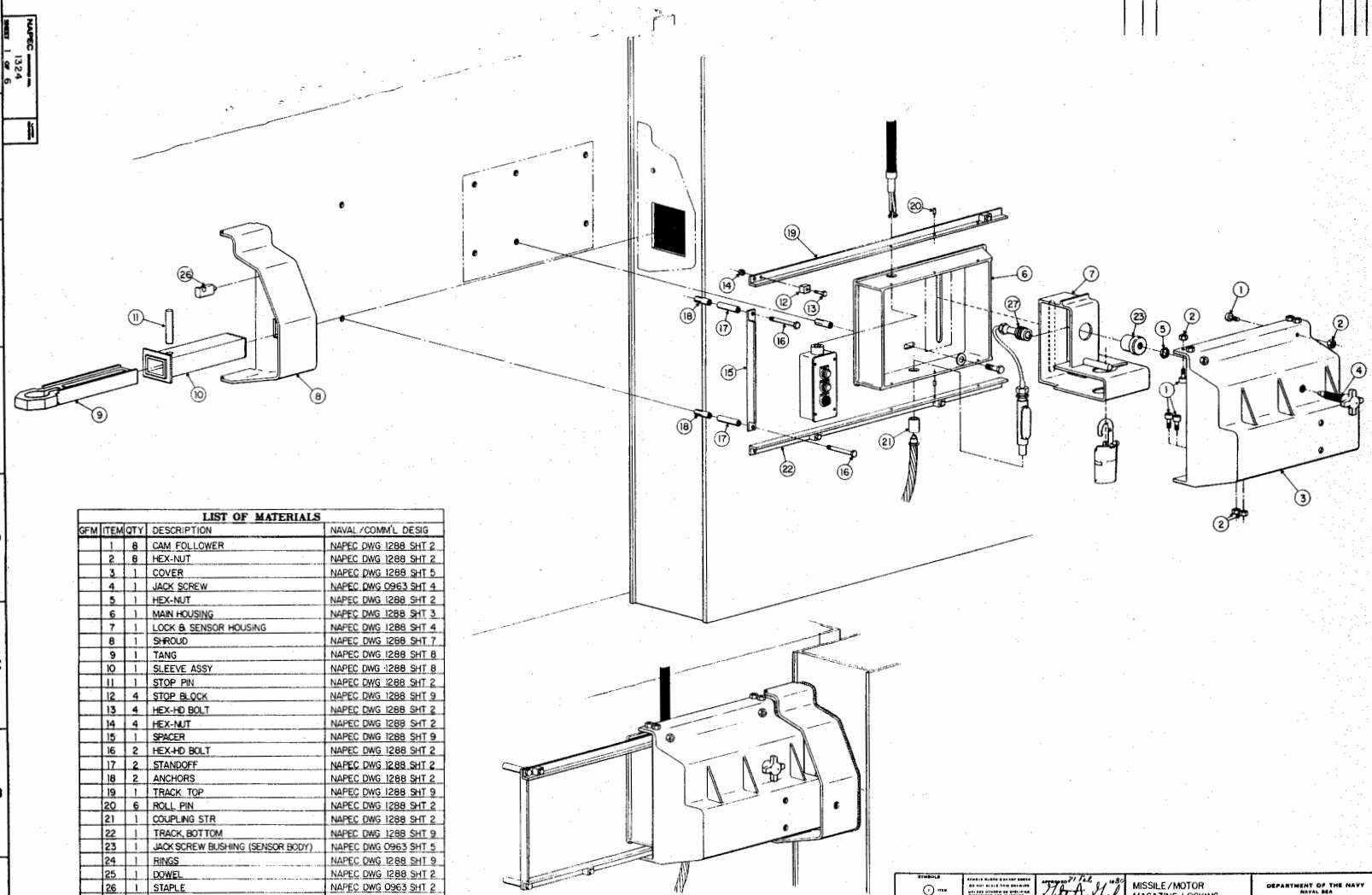

LIST OF MATERIALS				
GFM	ITEM	QTY	DESCRIPTION	NAVAL/COMM'L DESIG
	1	8	CAM FOLLOWER	NAPEC DWG 1288 SHT 2
	2	8	HEX-NUT	NAPEC DWG 1288 SHT 2
	3	1	COVER	NAPEC DWG 1288 SHT 5
	4	1	JACK SCREW	NAPEC DWG 0963 SHT 4
	5	1	HEX-NUT	NAPEC DWG 1288 SHT 2
	6	1	MAIN HOUSING	NAPEC DWG 1288 SHT 3
	7	1	LOCK & SENSOR HOUSING	NAPEC DWG 1288 SHT 4
	8	1	SHROUD	NAPEC DWG 1288 SHT 7
	9	1	TANG	NAPEC DWG 1288 SHT 8
	10	1	SLEEVE ASSY	NAPEC DWG 1288 SHT 8
	11	1	STOP PIN	NAPEC DWG 1288 SHT 2
	12	4	STOP BLOCK	NAPEC DWG 1288 SHT 9
	13	4	HEX-HD BOLT	NAPEC DWG 1288 SHT 2
	14	4	HEX-NUT	NAPEC DWG 1288 SHT 2
	15	1	SPACER	NAPEC DWG 1288 SHT 9
	16	2	HEX-HD BOLT	NAPEC DWG 1288 SHT 2
	17	2	STANDOFF	NAPEC DWG 1288 SHT 2
	18	2	ANCHORS	NAPEC DWG 1288 SHT 2
	19	1	TRACK TOP	NAPEC DWG 1288 SHT 9
	20	6	ROLL PIN	NAPEC DWG 1288 SHT 2
	21	1	COUPLING STR	NAPEC DWG 1288 SHT 2
	22	1	TRACK, BOTTOM	NAPEC DWG 1288 SHT 9
	23	1	JACK SCREW BUSHING (SENSOR BODY)	NAPEC DWG 0963 SHT 5
	24	1	RINGS	NAPEC DWG 1288 SHT 9
	25	1	DOWEL	NAPEC DWG 1288 SHT 2
	26	1	STAPLE	NAPEC DWG 0963 SHT 2
	27	1	INTRUSION SENSOR	NAPEC DWG 0963 SHT 5

MISSILE/MOTOR MAGAZINE LOCKING SYSTEM

TRIDENT

GENERAL ASSEMBLY

DEPARTMENT OF THE NAVY
NAVAL SEA SYSTEMS COMMAND
NAVAL AMMUNITION PRODUCTION ENGINEERING CENTER
CRANE, INDIANA

NAPEC DRAWING NO 1324

SHEET 1 OF 6

SIZE F

NOTICE: THE INFORMATION AND DRAWING DETAIL ON THIS DRAWING WERE DEVELOPED BY THE NAVAL AMMUNITION PRODUCTION ENGINEERING CENTER AND MAY BE USED BY OTHER GOVERNMENT AGENCIES.

NAPEC 1324 SHEET 2 OF 6

REVISIONS

ZONE	LTR	DESCRIPTION	DATE	D C G APPROVAL

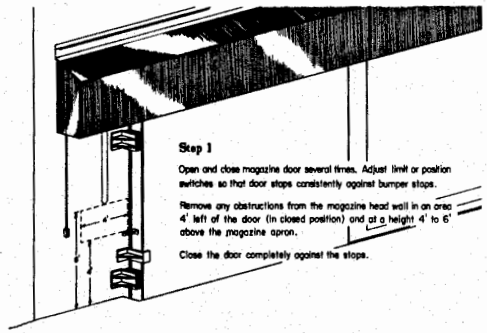

Step 1

Open and close magazine door several times. Adjust limit or position switches so that door stops consistently against bumper stops.

Remove any obstructions from the magazine head wall in an area 4' left of the door (in closed position) and at a height 4' to 6' above the magazine apron.

Close the door completely against the stops.

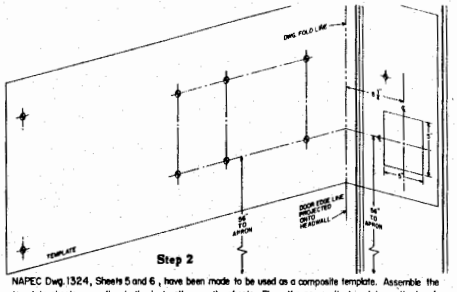

Step 2

NAPEC Dwg.1324, Sheets 5 and 6, have been made to be used as a composite template. Assemble the template sheets according to the instructions on the sheets. Place the composite template on the head wall and fold at the "Fold Line" in order that the end of the door may be marked for the long cut-out. Mark the wall and door end as indicated. Remove the template and drill the concrete to receive anchors.

Drill hole in door end for staple only after installation of Piece 8 (see Step 7).

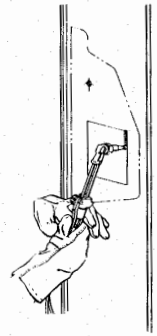

Step 3

Cut out 5" x 5" panel in end of door.

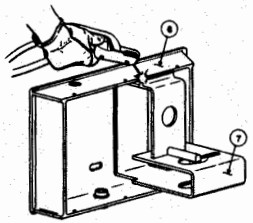

Step 4

Fit projection on back of lock and sensor housing, Piece 7, into groove of main housing, Piece 6. Weld assembled unit.

Step 5

Bolt the housing subassembly to the headwall using 1/2"-13 SAE bolts having a minimum tensile strength of 120 KSI. Use 1/2"-13 concrete anchors.

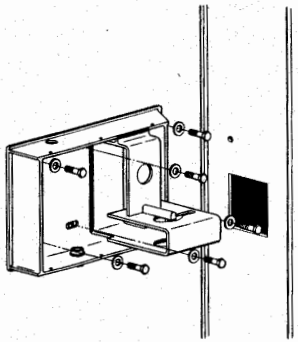

SYMBOLS

⊙	PIN
⊥	TABLE TOP
⊕	FIELD EQUIPMENT
⊠	FIELD EQUIPMENT

UNLESS NOTED OTHERWISE DIMENSIONS ARE IN INCHES

TOLERANCES
DECIMALS ± .005
FRACTIONS ± 1/64
ANGLES ± 0° 15'

INTERPRETATION DRAWING OF ACCORDANCE WITH STANDARDS PRESCRIBED IN MIL-STD-100

SCALE: NONE

SIZE F

DRAWN	21 Feb 1980	
DESIGNED		DATE
ENGINEERING		
ENGINEERING		
ENGINEERING		
ENGINEERING		
ENGINEERING		
ENGINEERING		
ENGINEERING		

MISSILE/MOTOR MAGAZINE LOCKING SYSTEM

TRIDENT

GENERAL ASSEMBLY

DEPARTMENT OF THE NAVY
NAVAL SEA
SYSTEMS COMMAND
NAVAL AMMUNITION PRODUCTION ENGINEERING CENTER
CRANE, INDIANA

NAPEC DRAWING NO. 1324

SHEET 2 OF 6

LATEST REVISION

NOTICE: THE CONTENTS AND DESIGN DETAIL OF THIS DRAWING WERE DEVELOPED BY THE NAVAL AMMUNITION PRODUCTION ENGINEERING CENTER AND ARE UNITED STATES GOVERNMENT PROPERTY.

REVISIONS					
ZONE	LTR	DESCRIPTION	DATE	APPROVED	

NAPEC 1324 SHEET 3 OF 6

Step 6

Assemble cover tracks, Pieces 15, 16, 17, 19, 20 and 22 to housing assembly and headwall.

Weld tracks to main housing, Piece 6.

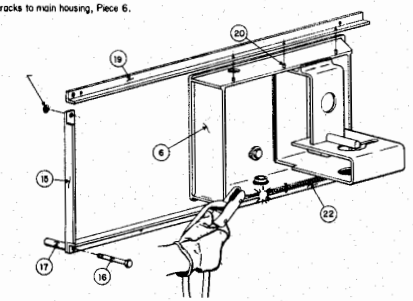

Step 7

Insert sleeve assy. Piece 10, through hole in shroud, Piece 8, and weld in place.
Insert tang, Piece 9, into sleeve assembly, Piece 10.
Install stop pin, Piece 11, through sleeve assembly, Piece 10, and tang, Piece 9. Weld stop pin in place.
Install and weld staple, Piece 26, to shroud, Piece 8. Drill relief hole in door end since Piece 26 length exceeds thickness of Piece 8.

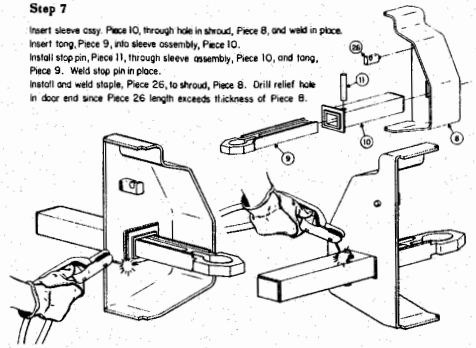

Step 8

An installation jig (NAPEC Dwg. 1288, Sheet 10) is available to align the lock hole of the lock and sensor housing, Piece 7, with the sliding tang and shroud assembly fabricated in Step 7.
Insert shroud assembly into door end hole cut in Step 3. Close door and slide tang into lock housing.
Wedge lower half of installation jig under tang and between tang and lock housing. Insert upper half of installation jig through hole and tang. Adjust shroud position on door end until entire jig, tang, lock housing configuration is stable.

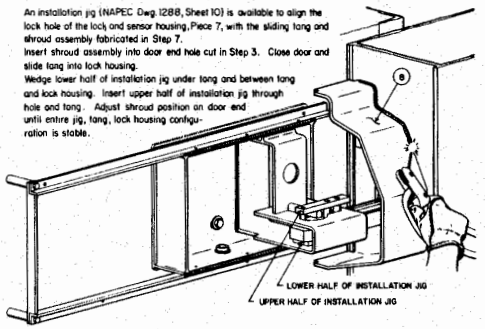

Weld shroud assembly, Piece 8, to door end with continuous weld.
Remove jig parts from around tang and lock housing assembly.

Step 9

Cover, Piece 3, comes with cam followers, Piece 1, (8) installed. Slide cover onto upper and lower track systems and install stop blocks, Piece 12 (4) at ends of track.

Partially thread jackscrew, Piece 4, into cover, Piece 3.

Install locking hex nut, Piece 5, onto jackscrew to prevent inadvertent removal of jackscrew.

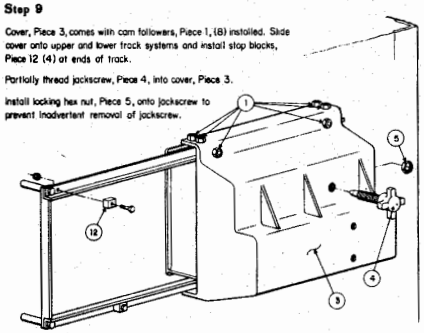

Step 10

Slide cover to the left exposing lock and sensor housing.

Insert sensor body, Piece 23, into the sensor hole. Do not weld until sensor body is is aligned with jackscrew.

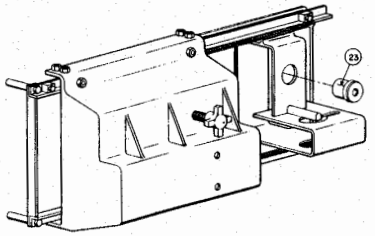

SYMBOLS: FIXED; WELD STOP; FREE (FLOAT); FIXED (SLIDE); WELD (SLIDE)

REMOVE BURRS & SHARP EDGES

DO NOT SCALE THIS DRAWING

UNLESS OTHERWISE SPECIFIED DIMENSIONS ARE IN INCHES

TOLERANCES

DECIMALS ± .005

FRACTIONS ± 1/64

ANGLES ± 0° 30'

INTERPRET DRAWING IN ACCORDANCE WITH STANDARD PRACTICES IN MIL-STD-100

SCALE | SIZE F

REVISIONS	DATE
DRAWN	
TRACED	
CHECKED	
APPD	
MANAGER	
ENGINEER	

MISSILE/MOTOR MAGAZINE LOCKING SYSTEM

TRIDENT

GENERAL ASSEMBLY

DEPARTMENT OF THE NAVY
NAVAL SEA
SYSTEMS COMMAND
NAVAL AMMUNITION PRODUCTION ENGINEERING CENTER
CRANE, INDIANA

NAPEC DRAWING NO. 1324

SHEET 3 OF 6

NOTICE: THE INFORMATION AND DESIGN DETAILS OF THIS DRAWING WERE DEVELOPED BY THE NAVAL PROPELLANT PLANTS, INDIAN HEAD AND WHITE OAK, AND ARE PROPRIETARY.

REVISIONS				
ZONE	LTR	DESCRIPTION	DATE	APPROVAL

NAPEC 1324 SHEET 4 OF 6

Step 11

Slide cover to the right.
Rotate jackscrew, Piece 4, until the tapered tip is fully seated in the sensor body. If misalignment exists, (1) back jackscrew out, (2) slide cover to open position, (3) remove sensor body, (4) enlarge sensor hole in housing, and (5) repeat previous steps.
Tack weld sensor body to housing.
Back jackscrew out and slide cover to the left. Finish welding sensor body to housing.

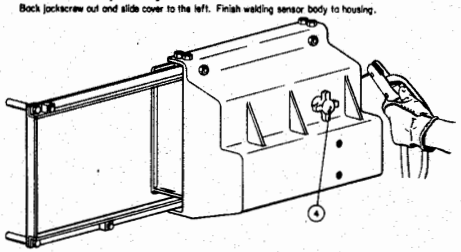

Step 12

Install intrusion sensor, Piece 27, in sensor body, Piece 23.
Install supporting sensor wiring.

NOTE: COVER NOT SHOWN IN THIS ILLUSTRATION FOR CLARITY

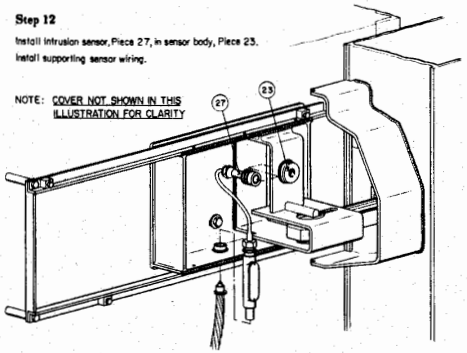

Step 13

Install door controls and supporting electrical equipment.

NOTE: COVER REMOVED IN THIS ILLUSTRATION FOR CLARITY

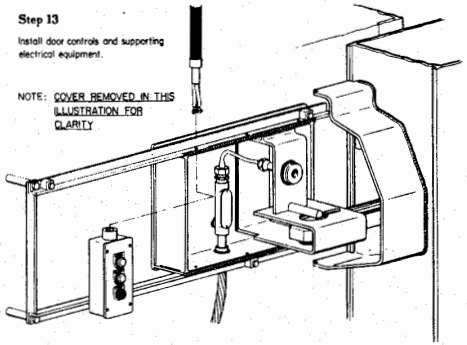

Step 14

The locking method used in the Trident hasp consists of a Sargent and Greenleaf, Model 8318, lock body used in a shear condition between the tang and the lock and sensor housing.

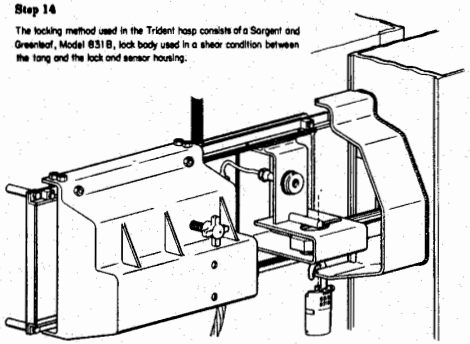

Step 15

Install reflective green tape on tang, Piece 9, as shown to allow for physical check of locked condition.

Drill a 3/4" diameter hole in shroud, Piece 8, as shown to facilitate viewing of tape when cover is closed and sensor deactivated.

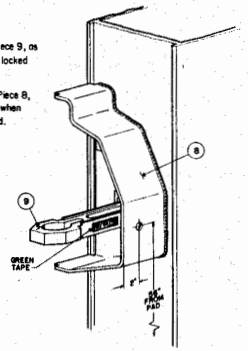

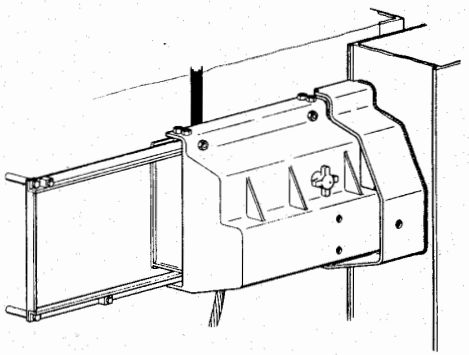

MISSILE/MOTOR MAGAZINE LOCKING SYSTEM TRIDENT	DEPARTMENT OF THE NAVY NAVAL SEA SYSTEMS COMMAND NAVAL AMMUNITION PRODUCTION ENGINEERING CENTER CRANE, INDIANA		
GENERAL ASSEMBLY	NAPEC DRAWING NO. 1324	SHEET 4 OF 6	

NOTICE: THE CONTENTS AND DRAWING DETAIL OF THIS DRAWING WERE DEVELOPED BY THE NAVAL AMMUNITION PRODUCTION ENGINEERING CENTER AND ARE UNITED STATES GOVERNMENT PROPERTY.

NAPEC DRAWING NO. 1324 SHEET 5 OF 6

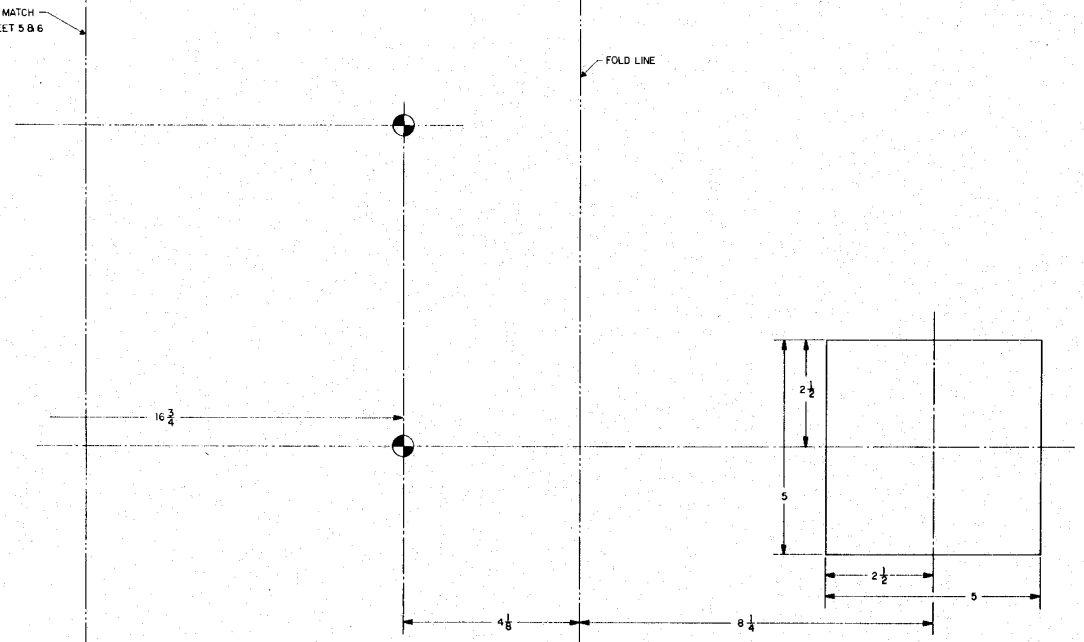

REVISIONS					
ZONE	LTR	DESCRIPTION	DATE	APPROVAL	

SYMBOLS: ITEM; WELD ITEM; ITEM CALLOUT; WELD PART CALLOUT

SCALE: SIZE F

COMPOSITE LAYOUT OF MOUNTING HOLES

TRIDENT
HIGH SECURITY
HASP HARDWARE

DEPARTMENT OF THE NAVY
NAVAL SEA
SYSTEMS COMMAND
NAVAL AMMUNITION PRODUCTION
ENGINEERING CENTER
CRANE, INDIANA

NAPEC DRAWING NO. 1324
SHEET 5 OF 6

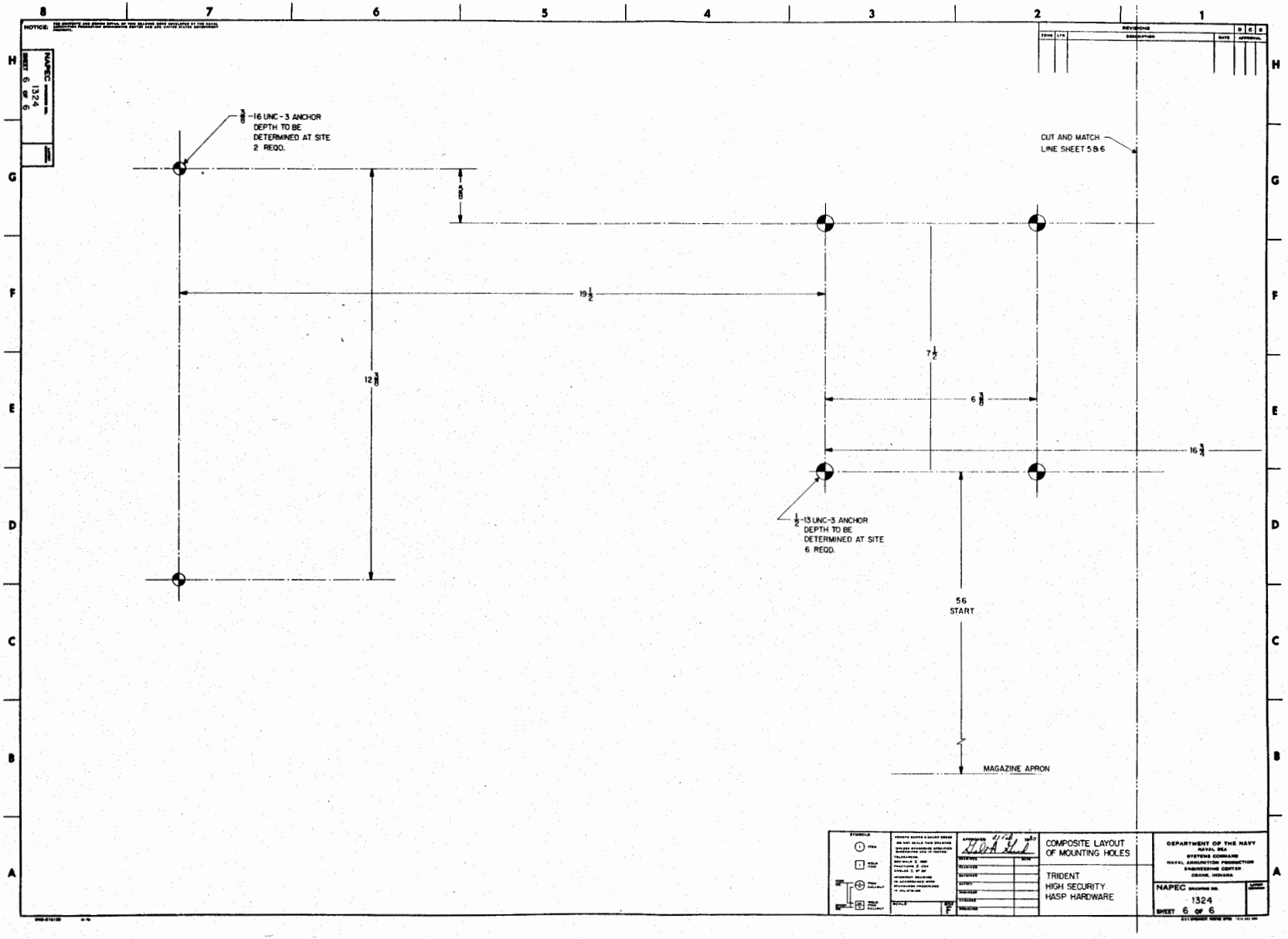
-16 UNC-3 ANCHOR
DEPTH TO BE
DETERMINED AT SITE
2 REQD.
CUT AND MATCH
LINE SHEET 5 & 6
19 1/2
12 3/8
7 1/2
6 3/8
16 3/4
1/2-13 UNC-3 ANCHOR
DEPTH TO BE
DETERMINED AT SITE
6 REQD.
56
START
MAGAZINE APRON
COMPOSITE LAYOUT
OF MOUNTING HOLES
TRIDENT
HIGH SECURITY
HASP HARDWARE
DEPARTMENT OF THE NAVY
NAVAL SEA
SYSTEMS COMMAND
NAVAL AMMUNITION PRODUCTION
ENGINEERING CENTER
CRANE, INDIANA
NAPEC
1324
SHEET 6 OF 6

NOTICE: THE CONTENTS AND DESIGN DETAIL OF THIS DRAWING WERE DEVELOPED BY THE NAVAL AMMUNITION PRODUCTION ENGINEERING CENTER AND ARE UNITED STATES GOVERNMENT PROPERTY

NAPEC DRAWING NO. 1382 SHEET 1 OF 2

NOTES
1. INTERPRET DRAWING IN ACCORDANCE WITH MIL-STD-100.
2. REMOVE BURRS AND SHARP EDGES

REVISIONS					
ZONE	LTR	DESCRIPTION	DATE	APPROVAL	
	A	SEE NOR 1382 A			

NOTE: INSTALLATION OF LOCK ANTI-ROTATION BLOCKS ALLOWS NAPEC 0957 & 0958 SECURITY HASP SYSTEM TO BE CERTIFIED HIGH SECURITY WITH S&G 826C LOCK.

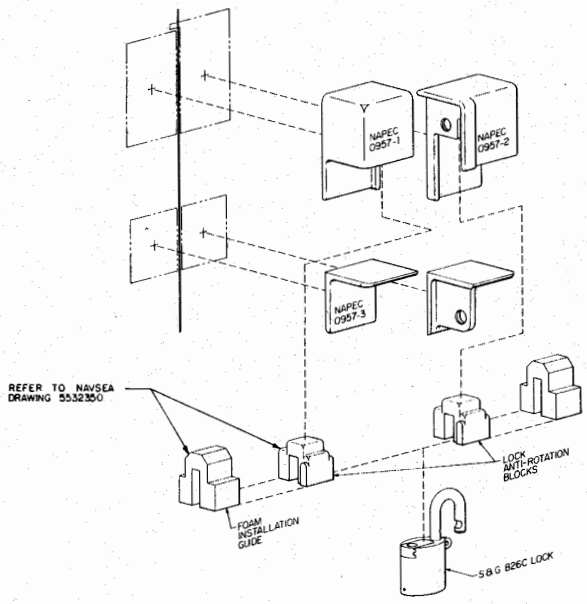

LOCK ANTI-ROTATION BLOCKS INSTALLED IN 0957 HASP

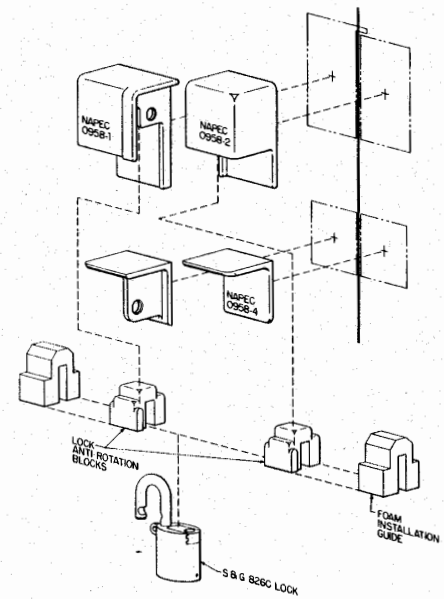

LOCK ANTI ROTATION BLOCKS INSTALLED IN 0958 HASP

FIND NO.	QTY REQ	CODE IDENT	PART, DRAWING OR SPEC NO.	NOMENCLATURE/DESCRIPTION	REMARKS

PARTS LIST

NEXT ASSY | USED ON
APPLICATION

SYMBOLS: ITEM; FIELD ITEM; ITEM CALLOUT; FIELD ITEM CALLOUT

DO NOT SCALE DRAWING
UNLESS OTHERWISE SPECIFIED DIMENSIONS ARE IN INCHES
TOLERANCES
XX DECIMALS ±
XXX DECIMALS ±
FRACTIONS ±
ANGLES ±
SCALE

	INITIALS	DATE
EXAMINED		
EXAMINED		
SAFETY		
ENGINEER		
CHECKED		
REVIEWED BY		

APPROVED MAR 8 1982

NAVAL AMMUNITION PRODUCTION ENGINEERING CENTER
CRANE, IN 47522

DEPARTMENT OF THE NAVY
NAVAL SEA SYSTEMS COMMAND
WASHINGTON, DC 20362

INSTALLATION INSTRUCTIONS
FOR
LOCK ANTI-ROTATION BLOCKS
USING NAPEC HASPS 0957 & 0958

SIZE	CODE IDENT NO	NAVAMPRDENGCEN DWG NO
F	63711	NAPEC 1382

SHEET 1 OF 2

NOTICE: THE CONTENTS AND DESIGN DETAILS OF THE DRAWING WERE DEVELOPED BY THE NAVAL AMMUNITION PRODUCTION ENGINEERING CENTER AND ARE UNITED STATES GOVERNMENT PROPERTY.

NAPEC 1382 SHEET 2 OF 2

NOTES
1. INTERPRET DRAWING IN ACCORDANCE WITH MIL-STD-100.
2. REMOVE BURRS AND SHARP EDGES

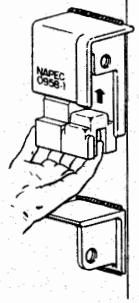

STEP 1

GENERAL.

THE LOCK ANTI-ROTATION BLOCKS HAVE BEEN DESIGNED TO PREVENT THE MEDIUM SECURITY S&G 826C LOCK FROM ROTATING IN THE NAVY'S HIGH SECURITY HASP SYSTEM. THUS IT ACTS AND CAN BE CERTIFIED AS A HIGH SECURITY SYSTEM. HOWEVER, THE EXISTANCE OF SHORT SHACKLED S&G 826C LOCKS MAKES IT NECESSARY TO ADJUST THE FIT OF THE ANTI-ROTATION BLOCKS BEFORE WELDING TO THE HASP.

A. OPEN DOORS AND INSERT ONE ANTI-ROTATION BLOCK AND ITS FOAM GUIDE INTO THE LEFT-HAND HASP UNIT AS SHOWN.

B. INSERT ANOTHER ANTI-ROTATION BLOCK AND ITS FOAM GUIDE INTO THE RIGHT-HAND HASP IN THE SAME MANNER.

(THE FOAM GUIDES ARE DESIGNED TO HOLD THE BLOCKS IN PLACE TO DETERMINE THE FIT.)

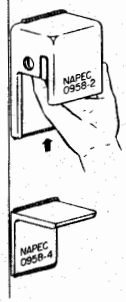

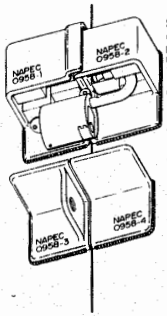

STEP 2

GENERAL:

EACH ANTI-ROTATION BLOCK MUST BE INSERTED UNTIL THE PROTRUDING EAR FITS COMPLETELY IN THE SLOTS OF THE HASP. THE LOCK MAY THEN BE INSTALLED TO CHECK THE FIT.

A. CLOSE DOORS AND INSERT S&G 826C LOCK THROUGH HASP.

B. LOCK THE LOCK AND REMOVE THE KEY.

(1) IF IT LOCKS EASILY, GO ON TO STEP 4.

(2) IF THE LOCK WILL NOT LOCK, IT MAY BE CAUSED BY TOO TIGHT A FIT BETWEEN THE ANTI-ROTATION BLOCKS AND THE LOCK. REMOVE THE LOCK, FOAM GUIDES AND ANTI-ROTATION BLOCKS AND GO TO STEP 3.

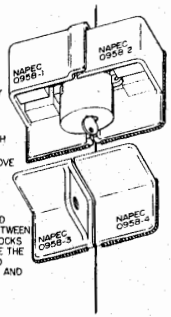

STEP 3

GENERAL:

A BETTER FIT MAY BE OBTAINED BY GRINDING AWAY A PORTION OF THE EAR WHICH FITS IN THE HASP SLOT. REMOVAL OF 1/16-INCH WILL GENERALLY BE SUFFICIENT TO ALLOW THE LOCK TO CLOSE BUT NOT ENOUGH TO DEFEAT THE PURPOSE OF THE BLOCKS. AFTER GRINDING, REPEAT STEPS 1 & 2.

STEP 4

GENERAL:

THE LOCK ANTI-ROTATION BLOCKS DO NOT HAVE TO BE FULL WELDED TO THE HASP TO PROVIDE SECURITY. ALSO, THE BLOCKS MUST BE REMOVED IF THE S&G 831B LOCK IS TO BE USED.

A. TACK WELD ANTI-ROTATION BLOCKS TO THEIR RESPECTIVE HASP HALVES AS SHOWN. (TACK WELD ONLY)!!

B. USE 308-15 OR 308-16 WELDING ROD FOR BEST RESULTS.

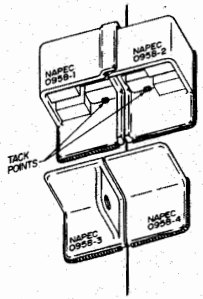

STEP 5

REMOVE FOAM INSTALLATION GUIDES AND DISCARD.

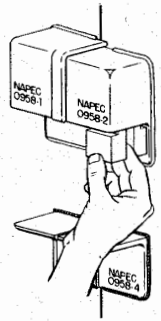

FIND NO.	QTY REQ	CODE IDENT	PART, DRAWING OR SPEC NO.	NOMENCLATURE/DESCRIPTION	REMARKS

PARTS LIST

NEXT ASSY	USED ON
APPLICATION	

SYMBOLS: ITEM; WELD ITEM; ITEM CALLOUT; WELD ITEM CALLOUT

DO NOT SCALE DRAWING. UNLESS OTHERWISE SPECIFIED, DIMENSIONS ARE IN INCHES. TOLERANCES: XX DECIMALS ±; XXX DECIMALS ±; FRACTIONS ±; ANGLES ±. SCALE.

	INITIALS	DATE
EXAMINED		
EXAMINED		
SAFETY		
ENGINEER		
CHECKED		
DESIGNED		

APPROVED JAN 15 1982

NAVAL AMMUNITION PRODUCTION ENGINEERING CENTER, CRANE, IN 47522

DEPARTMENT OF THE NAVY, NAVAL SEA SYSTEMS COMMAND, WASHINGTON, DC 20362

INSTALLATION INSTRUCTIONS FOR LOCK ANTI ROTATION BLOCKS USING NAPEC HASPS 0957 & 0958

SIZE F | CODE IDENT NO. 53711 | NAVAMPRDENGCEN DWG NO. NAPEC 1382 | SHEET 2 OF 2

NOTICE: THE CONTENTS AND DESIGN DETAILS OF THIS DRAWING WERE DEVELOPED BY THE NAVAL AMMUNITION PRODUCTION ENGINEERING CENTER AND ARE UNITED STATES GOVERNMENT PROPERTY.

NAPEC 1403 SHEET 1 OF

NOTES

1. INTERPRET DRAWING IN ACCORDANCE WITH MIL-STD-100.
2. REMOVE BURRS AND SHARP EDGES
3. HIGH SECURITY HASP INSTALLATION HEIGHT IS INTENDED TO BE OPERATOR CONVENIENT. FOR STRUCTURES WITH A DOCK OR APRON GREATER THAN TWO (2) INCHES BELOW THE BOTTOM OF THE DOOR, THE HEIGHT DIMENSION SPECIFIED SHOULD BE MEASURED FROM THE SURFACE OF THE DOCK OR APRON IN LIEU OF THE BOTTOM OF THE DOOR. (A)

INSTALLATION INSTRUCTIONS

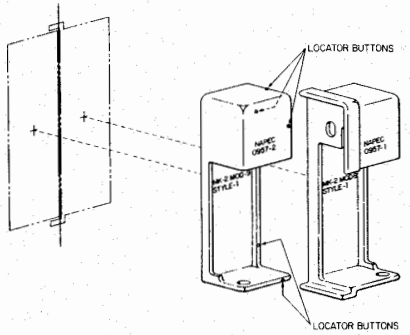

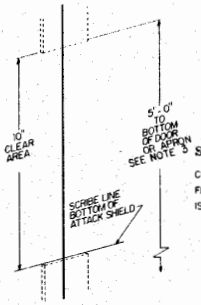

(A)

STEP 1

CUT AWAY 10 INCHES OF ASTRAGAL FROM MAGAZINE DOOR IF ASTRAGAL IS PRESENT.

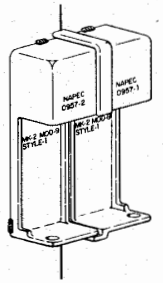

STEP 2

NOTE: LOCATOR BUTTONS HAVE BEEN CAST ONTO THE HASP TO AID INSTALLATION. POSITION HASP ON DOORS USING THE BUTTONS TO ESTABLISH CLEARANCE. TACK WELD HASP ONTO DOORS.

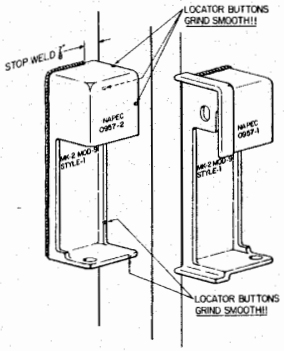

STEP 3

OPEN DOOR AND FINISH WELDING.*

CAUTION

DO NOT WELD ON DOOR EDGES. GRIND OFF LOCATOR BUTTONS!! CLOSE DOORS.

*NOTE: USE WELDING ELECTRODE 310-15 OR 310-16, 3/32 DIA. (A)

APPLICATIONS

RIGHT HAND DOOR OPENING FIRST WITHOUT ASTRAGAL

RIGHT HAND DOOR OPENING FIRST WITH ASTRAGAL

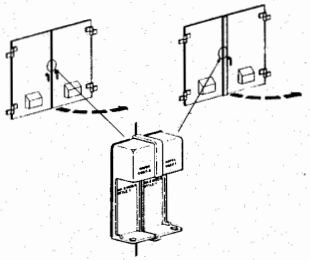

SINGLE DOOR HINGED RIGHT SWINGING OUT

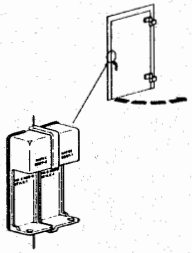

DOUBLE SLIDING DOORS ON INSIDE OR OUTSIDE OF JAMB

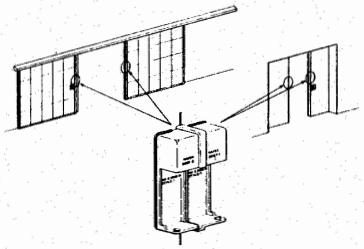

SLIDING DOORS MOVING RIGHT TO OPEN WITH DOOR ON OUTSIDE OF JAMB

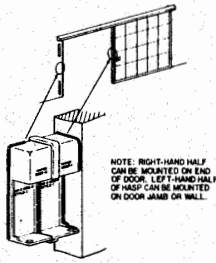

NOTE: RIGHT-HAND HALF CAN BE MOUNTED ON END OF DOOR. LEFT-HAND HALF OF HASP CAN BE MOUNTED ON DOOR JAMB OR WALL.

SINGLE DOOR HINGED LEFT OPENING IN

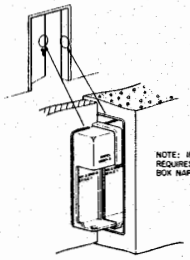

NOTE: INSTALLATION REQUIRES WALL MOUNTING BOX NAPEC 1286

SLIDING DOOR MOVING RIGHT TO OPEN WITH DOOR ON INSIDE OF JAMB

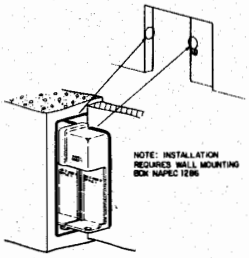

NOTE: INSTALLATION REQUIRES WALL MOUNTING BOX NAPEC 1286

REVISIONS					
ZONE	LTR	DESCRIPTION	DATE	D	C	B APPROVAL
	A	SEE NOR 1403 A			

FIND NO.	QTY REQ.	CODE IDENT	PART DRAWING OR SPEC NO.	NOMENCLATURE/DESCRIPTION	REMARKS

PARTS LIST

NEXT ASSY	USED ON
APPLICATION	

SYMBOLS: ITEM; WELD ITEM; ITEM CALLOUT; WELD ITEM CALLOUT

DO NOT SCALE DRAWING. UNLESS OTHERWISE SPECIFIED DIMENSIONS ARE IN INCHES. TOLERANCES: XX DECIMALS ±; XXX DECIMALS ±; FRACTIONS ±; ANGLES ±. SCALE

	INITIALS	DATE
EXAMINED		
EXAMINED		
SAFETY		
ENGINEER		
CHECKED		
DESIGNED		
APPROVED		2 AUG 1982

NAVAL AMMUNITION PRODUCTION ENGINEERING CENTER, CRANE, IN 47522

DEPARTMENT OF THE NAVY, NAVAL SEA SYSTEMS COMMAND, WASHINGTON, DC 20362

HIGH SECURITY HASP APPLICATION AND INSTALLATION INSTRUCTIONS FOR MK 2 MOD 9 STYLE 1

SIZE F | CODE IDENT NO. 53711 | NAVAMPRDENGCEN DWG NO. 1403 | SHEET | OF

NOTICE: THE CONTENTS AND DESIGN DETAIL OF THIS DRAWING WERE DEVELOPED BY THE NAVAL AMMUNITION PRODUCTION ENGINEERING CENTER AND ARE UNITED STATES GOVERNMENT PROPERTY

REVISIONS					
ZONE	LTR	DESCRIPTION	DATE	APPROVAL	
	A	SEE NOR 1404 A			

NAPEC — 1404 SHEET 1 OF 1

NOTES
1. INTERPRET DRAWING IN ACCORDANCE WITH MIL-STD-100.
2. REMOVE BURRS AND SHARP EDGES
3. HIGH SECURITY HASP INSTALLATION. HEIGHT IS INTENDED TO BE OPERATOR CONVENIENT. FOR STRUCTURES WITH A DOCK OR APRON GREATER THAN TWENTY (20) INCHES BELOW THE BOTTOM OF THE DOOR, THE HEIGHT DIMENSION SPECIFIED SHOULD BE MEASURED FROM THE SURFACE OF THE DOOR OR APRON IN LIEU OF THE BOTTOM OF THE DOOR. (A)

INSTALLATION INSTRUCTIONS

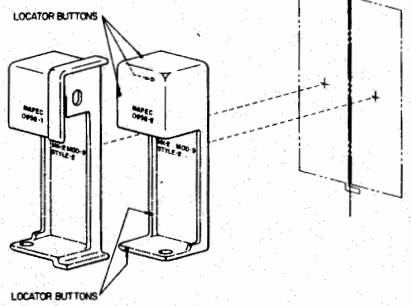

STEP 1

CUT AWAY 10 INCHES OF ASTRAGAL FROM MAGAZINE DOOR IF ASTRAGAL IS PRESENT. (A)

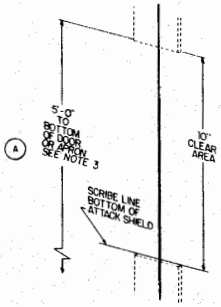

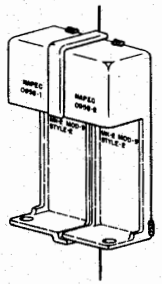

STEP 2

NOTE: LOCATOR BUTTONS HAVE BEEN CAST ONTO THE HASP TO AID INSTALLATION. POSITION HASP ON DOORS USING THE BUTTONS TO ESTABLISH CLEARANCE. TACK WELD HASP ONTO DOORS.

NOTE: USE WELDING ELECTRODE 310-15 OR 310-16, 3/32 DIA. (A)

STEP 3

OPEN DOOR AND FINISH WELDING.*

CAUTION

DO NOT WELD ON DOOR EDGES.
GRIND OFF LOCATOR BUTTONS!!
CLOSE DOORS.

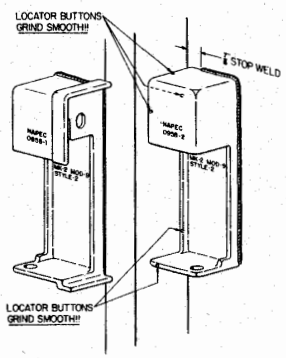

APPLICATIONS

LEFT HAND DOOR OPENING FIRST WITH ASTRAGAL

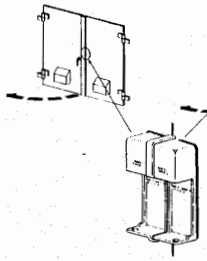

LEFT HAND DOOR OPENING FIRST WITHOUT ASTRAGAL

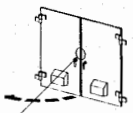

SINGLE DOOR HINGED LEFT SWINGING OUT

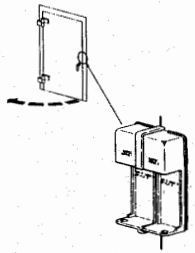

DOUBLE SLIDING DOORS ON INSIDE OR OUTSIDE OF JAMB

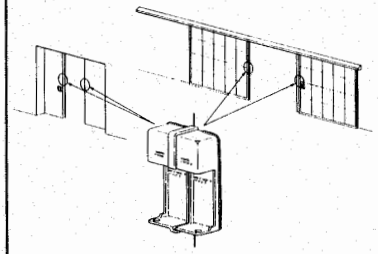

SLIDING DOORS MOVING LEFT TO OPEN WITH DOOR ON OUTSIDE OF JAMB

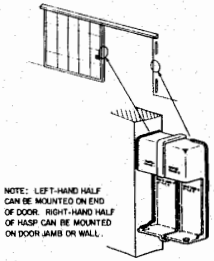

NOTE: LEFT-HAND HALF CAN BE MOUNTED ON END OF DOOR. RIGHT-HAND HALF OF HASP CAN BE MOUNTED ON DOOR JAMB OR WALL.

SINGLE DOOR HINGED RIGHT OPENING IN

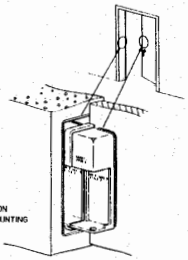

NOTE: INSTALLATION REQUIRES WALL MOUNTING BOX NAPEC 1286

SLIDING DOOR MOVING LEFT TO OPEN WITH DOOR ON INSIDE OF JAMB

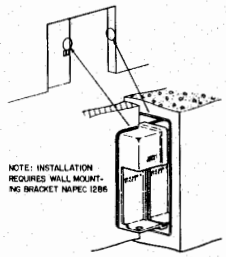

NOTE: INSTALLATION REQUIRES WALL MOUNTING BRACKET NAPEC 1286

FIND NO.	QTY REQ	CODE IDENT	PART, DRAWING OR SPEC NO	NOMENCLATURE/DESCRIPTION	REMARKS

PARTS LIST

NEXT ASSY	USED ON
	APPLICATION

SYMBOLS: (1) ITEM; (2) WELD ITEM; (3) ITEM CALLOUT; (4) WELD ITEM CALLOUT

DO NOT SCALE DRAWING
UNLESS OTHERWISE SPECIFIED, DIMENSIONS ARE IN INCHES
TOLERANCES
XX DECIMALS ±
XXX DECIMALS ±
FRACTIONS ±
ANGLES ±
SCALE

	INITIALS	DATE
EXAMINED		
EXAMINED		
SAFETY		
ENGINEER		
CHECKED		
DESIGNED		
APPROVED 21 Aug 1982		

NAVAL AMMUNITION PRODUCTION ENGINEERING CENTER, CRANE, IN 47522
DEPARTMENT OF THE NAVY, NAVAL SEA SYSTEMS COMMAND, WASHINGTON, DC 20362

HIGH SECURITY HASP APPLICATION AND INSTALLATION INSTRUCTIONS FOR MK 2 MOD 9 STYLE 2

SIZE	CODE IDENT NO.	NAVAMPRCENCEN DWG NO.
F	53711	1404

SHEET 1 OF 1

NOTICE: THE CONCEPTS AND DESIGN DETAIL OF THE DRAWING HERE DESCRIBED BY THE NAVAL AMMUNITION PRODUCTION ENGINEERING CENTER AND ARE UNITED STATES GOVERNMENT PROPERTY

NAVSEA 5532334 SHEET 1 OF 3

REVISIONS						
ZONE	LTR	DESCRIPTION	DATE	D	C	B APPROVAL
	A	SEE NOR 6532334 A				

NOTES
1. INTERPRET DRAWING IN ACCORDANCE WITH MIL-STD-100.
2. REMOVE BURRS AND SHARP EDGES
3. INVESTMENT CASTING TO MIL-C-6021 CLASS 2B.
4. ZYGLO PER MIL-I-6866
5. FINISH NAS-823-C-12
6. REMELT MATL ACCEPTABLE, NO SLAG OR FOREIGN ALLOYS.
7. SURFACE REQT: NAS 823 C/25
8. LINEAR TOL (CASTINGS)
   UP TO 1/2 ± .007
   " " 1 ± .010
   " " 2 ± .013
   " " 3 ± .016
   " " 4 ± .019
   " " 5 ± .022
   " " 6 ± .025
   " " 7 ± .028
   " " 8 ± .031
   " " 9 ± .034
   " " 10 ± .037
   MAX. VARIATION ± .040
9. FORMERLY NAPEC DWG. NO. 0957 REV C

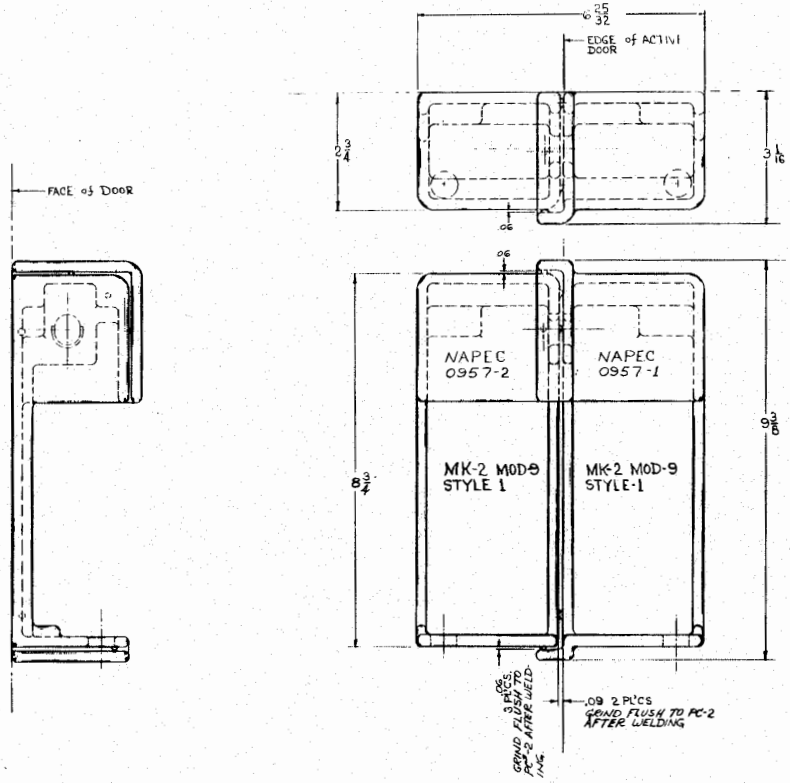

REVISION	STATUS OF SHEETS	
A	A	A
1	2	3

FIND NO.	QTY REQ	CODE IDENT	PART, DRAWING OR SPEC NO.	NOMENCLATURE/DESCRIPTION	REMARKS
-2	1		CF-3 SEE NOTES	CASTING, PASSIVE DOOR	SEE NOTES 1 THRU 8
-1	1		AMS 5370	CASTING, ACTIVE DOOR	

PARTS LIST

NEXT ASSY	USED ON
APPLICATION	

SYMBOLS: ITEM; MILD ITEM; ITEM CALLOUT; MILD ITEM CALLOUT

DO NOT SCALE DRAWING

UNLESS OTHERWISE SPECIFIED DIMENSIONS ARE IN INCHES.

TOLERANCES: XX DECIMALS ±, XXX DECIMALS ±, FRACTIONS ±, ANGLES ±, SEE NOTE #8

SCALE: FULL

	INITIALS	DATE
DRAWN		
EXAMINED		
EXAMINED		
SAFETY		
ENGINEER		
CHECKED		
RECORD DATE	G.T.S.	4-82
APPROVED	22 Jun 82	

NAVAL AMMUNITION PRODUCTION ENGINEERING CENTER, CRANE, IN 47522

DEPARTMENT OF THE NAVY NAVAL SEA SYSTEMS COMMAND WASHINGTON, DC 20362

HIGH SECURITY HASP MK-2 MOD-9 HINGED OR SLIDING HORIZONTAL DOOR RIGHT-HAND STYLE-1

SIZE	CODE IDENT NO.	NAVSEA DWG NO.	SHEET
F	63711	5532334	1 OF 3

NOTICE: THE CONTENTS AND DESIGN DETAIL OF THIS DRAWING WERE DEVELOPED BY THE NAVAL AMMUNITION PRODUCTION ENGINEERING CENTER AND ARE UNITED STATES GOVERNMENT PROPERTY

NOTES
1. INTERPRET DRAWING IN ACCORDANCE WITH MIL-STD-100.
2. REMOVE BURRS AND SHARP EDGES

SHEET 3 OF 3 — 5532334

REVISIONS				
ZONE	LTR	DESCRIPTION	DATE	O C S APPROVAL
	A	SEE NOR 5532334 A		

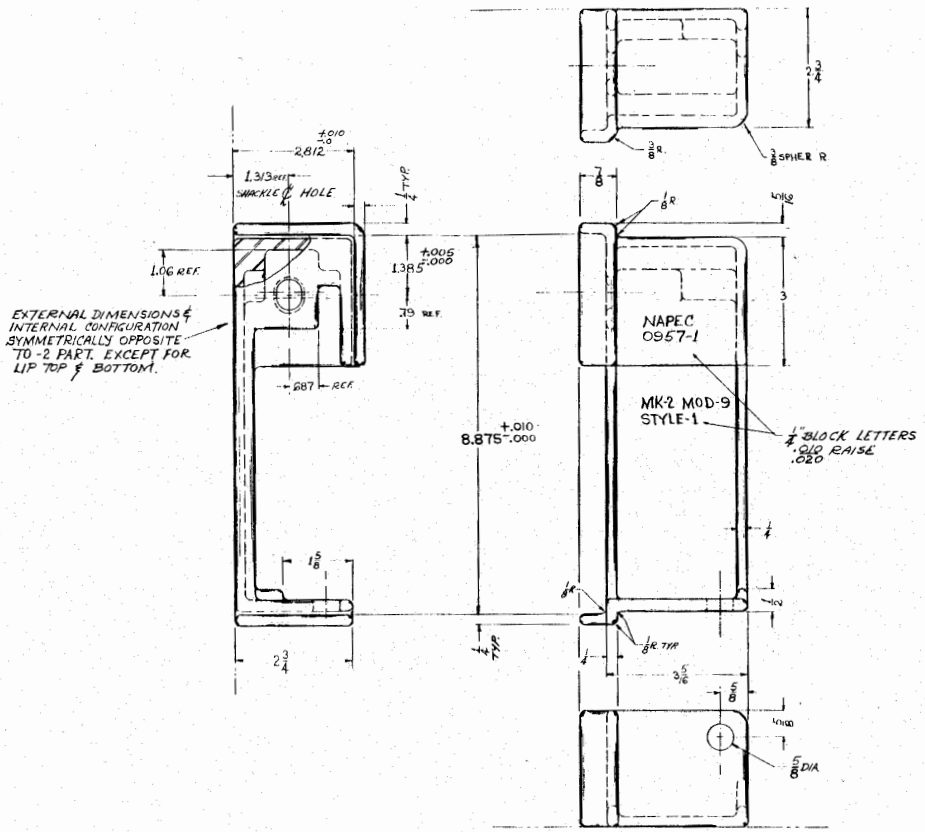

(1) NAPEC #0957
CASTING, ACTIVE DOOR
STAINLESS STEEL 304 L CF 3
AMS 5370

FIND NO.	QTY REQ	CODE IDENT	PART, DRAWING OR SPEC NO.	NOMENCLATURE/DESCRIPTION	REMARKS
-1	1		304 L CF-3	CASTING, ACTIVE DOOR	SEE NOTES SHT. #1

PARTS LIST

NEXT ASSY	USED ON
APPLICATION	

SYMBOLS: ITEM; WELD ITEM; ITEM CALLOUT; WELD ITEM CALLOUT

DO NOT SCALE DRAWING. UNLESS OTHERWISE SPECIFIED DIMENSIONS ARE IN INCHES. TOLERANCES: XX DECIMALS ± .1; XXX DECIMALS ± .01; FRACTIONS ± 1/64; ANGLES ± 1°

SCALE: FULL

	INITIALS	DATE
DRAWN		
EXAMINED		
SAFETY		
ENGINEER		
CHECKED		
APPROVED	G.J.S.	4-82

NAVAL AMMUNITION PRODUCTION ENGINEERING CENTER, CRANE, IN 47522

DEPARTMENT OF THE NAVY NAVAL SEA SYSTEMS COMMAND WASHINGTON, DC 20362

HIGH SECURITY HASP MK-2 MOD-9 HINGED OR SLIDING HORIZONTAL DOOR DETAIL

SIZE	CODE IDENT NO.	DRWG NO	DATE
F	53711	5532334	9-82

SHEET 3 OF 3

NOTICE: THE CONTENTS AND DESIGN DETAIL OF THIS DRAWING WERE DEVELOPED BY THE NAVAL AMMUNITION PRODUCTION ENGINEERING CENTER AND ARE UNITED STATES GOVERNMENT PROPERTY

NOTES
1. INTERPRET DRAWING IN ACCORDANCE WITH MIL-STD-100.
2. REMOVE BURRS AND SHARP EDGES

ZONE	LTR	REVISIONS DESCRIPTION	DATE	D C A APPROVAL
	A	SEE NOR 5532334 A	3/6/	

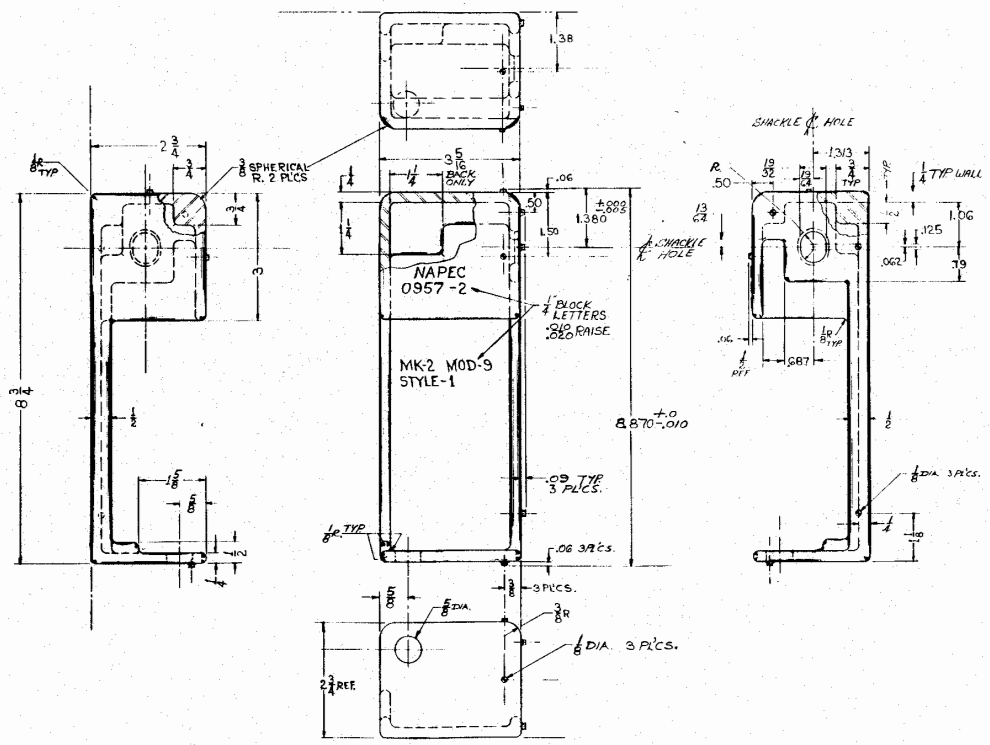

(2) NAPEC # 0957
CASTING, PASSIVE DOOR
STAINLESS STEEL 304L CF-3
AMS 5370

FIND NO.	QTY REQ	CODE IDENT	PART, DRAWING OR SPEC NO.	NOMENCLATURE/DESCRIPTION	REMARKS
-2	1		304L, CF-3	CASTING, PASSIVE DOOR	SEE NOTES SHT #1

PARTS LIST

NEXT ASSY	USED ON
APPLICATION	

SYMBOLS: ITEM; WELD FILLET; ITEM CALLOUT; WELD FILLET CALLOUT

DO NOT SCALE DRAWING
UNLESS OTHERWISE SPECIFIED NOTED DIMENSIONS ARE IN INCHES
TOLERANCES: XX DECIMALS ± SEE SHEET #1; XXX DECIMALS ±; FRACTIONS ±; ANGLES ±
SCALE FULL

	INITIALS	DATE
EXAMINED		
EXAMINED		
SAFETY		
ENGINEER		
CHECKED		
ISSUED	GJB	4-82
APPROVED		

NAVAL AMMUNITION PRODUCTION ENGINEERING CENTER CRANE, IN 47522

DEPARTMENT OF THE NAVY NAVAL SEA SYSTEMS COMMAND WASHINGTON, DC 20362

HIGH SECURITY HASP MK-2 MOD-9 HINGED OR SLIDING HORIZONTAL DOOR DETAIL

SIZE F | CODE IDENT NO. 53711 | NAVSEA 5532334 | DWG NO | SHEET 2 OF 3 | DATE 5-82

NOTICE: THE CONTENTS AND DESIGN INTO ALL OF THIS DRAWING WERE DEVELOPED BY THE NAVAL AMMUNITION PRODUCTION ENGINEERING CENTER AND ARE UNITED STATES GOVERNMENT PROPERTY

REVISIONS					
ZONE	LTR	DESCRIPTION	DATE	APPROVAL D	C	S
	A	SEE NOR 5532335 A	3/6/79			

MAGNETIC PARTICLE 5532335 SHEET 1 OF 3

(A)

NOTES

1. INTERPRET DRAWING IN ACCORDANCE WITH MIL-STD-100.
2. REMOVE BURRS AND SHARP EDGES
3. INVESTMENT CASTINGS PER MIL-C-6021 CLASS 2B
4. ZYGLO PER MIL-I-6866
5. FINISH NAS-823-C12
6. REMELT MAT'L. ACCEPTABLE, NO SLAG OR FOREIGN ALLOYS.
7. SURFACE REQT. NAS-823C/25.
8. LINEAR TOL. (CASTINGS)
   UP TO 1/2 ±.007
   " " 1" ±.010
   " " 2" ±.013
   " " 3" ±.016
   " " 4" ±.019
   " " 5" ±.022
   " " 6" ±.025
   " " 7" ±.028
   " " 8" ±.031
   " " 9" ±.034
   " " 10" ±.037
   MAX. VARIATION .040
9. FORMERLY NAPEC DWG. NO. 0958 REV C

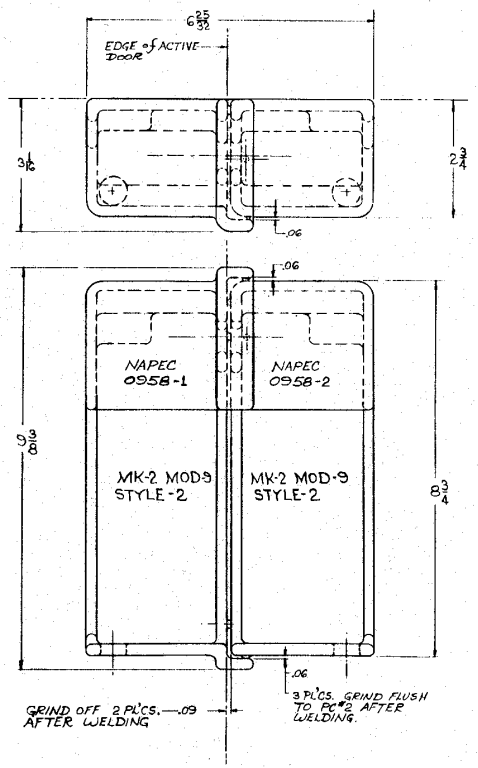

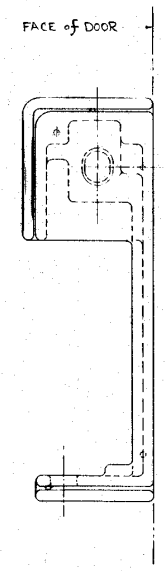

A	A	A
1	2	3
REVISION STATUS OF SHEETS		

(A)

FIND NO.	QTY REQ	CODE IDENT	PART, DRAWING OR SPEC NO.	NOMENCLATURE/DESCRIPTION	REMARKS
-2	1		UF-3 304-L	CASTING, PASSIVE DOOR	SEE NOTES 1 THRU 8
-1	1		AMS 5370	CASTING, ACTIVE DOOR	

PARTS LIST

NEXT ASSY	USED ON		
APPLICATION			

SYMBOLS: ITEM; WELD ITEM; ITEM CALLOUT; WELD ITEM CALLOUT

DO NOT SCALE DRAWING
UNLESS OTHERWISE SPECIFIED DIMENSIONS ARE IN INCHES
TOLERANCES
XX DECIMALS ± SEE
XXX DECIMALS ± NOTE
FRACTIONS ± #8
ANGLES ±
SCALE: FULL

	INITIALS	DATE
EXAMINED		
EXAMINED		
SAFETY		
ENGINEER		
CHECKED		
DRAWN	GJS	2-82
APPROVED		22 SEP 10 82

NAVAL AMMUNITION PRODUCTION ENGINEERING CENTER
CRANE, IN 47522

DEPARTMENT OF THE NAVY
NAVAL SEA SYSTEMS COMMAND
WASHINGTON, DC 20362

HIGH SECURITY HASP MK-2 MOD 9
HINGED OR SLIDING HORIZONTAL DOOR
LEFT HAND STYLE-2

SIZE	CODE IDENT NO	NAVSEA DWG. NO.	DATE
F	53711	5532335	9-82

SHEET 1 OF 3

NOTICE: THE CONTENTS AND DESIGN DETAIL OF THIS DRAWING WERE DEVELOPED BY THE NAVAL AMMUNITION PRODUCTION ENGINEERING CENTER AND ARE UNITED STATES GOVERNMENT PROPERTY

NOTES
1. INTERPRET DRAWING IN ACCORDANCE WITH MIL-STD-100.
2. REMOVE BURRS AND SHARP EDGES

MARKING 5532335 SHEET 2 OF 3

ZONE	LTR	REVISIONS DESCRIPTION	DATE	APPROVAL
	A	SEE NOR 5532335 A		

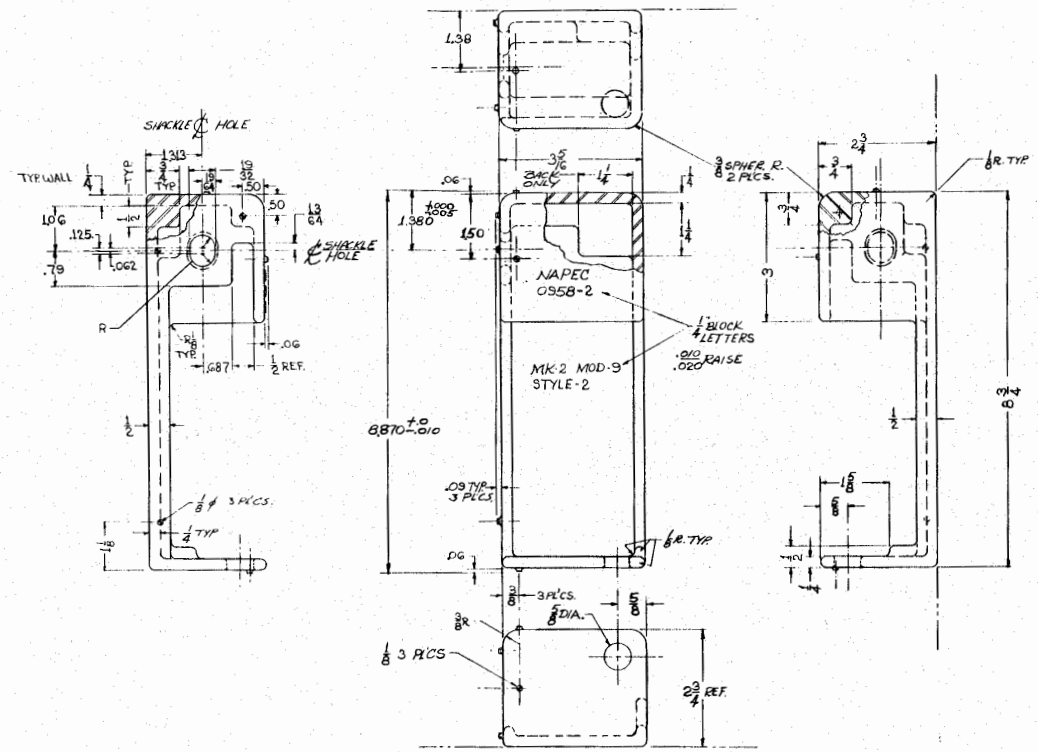

(2) NAPEC #0958
CASTING, PASSIVE DOOR
304 L CF-3
AMS 5370

FIND NO.	QTY REQ	CODE IDENT	PART, DRAWING OR SPEC NO.	NOMENCLATURE/DESCRIPTION	REMARKS
-2	1		304L CF-3	CASTING PASSIVE DOOR	SEE NOTES SHT #1

PARTS LIST

SYMBOLS: ⊙ ITEM; ⊡ WELD ITEM; ITEM NO. ⊕ ITEM CALLOUT; BASE NO. ⊞ WELD ITEM CALLOUT	DO NOT SCALE DRAWING. UNLESS OTHERWISE SPECIFIED DIMENSIONS ARE IN INCHES. TOLERANCES: XX DECIMALS ± SEE NOTES SHT 1; XXX DECIMALS ±; FRACTIONS; ANGLES		INITIALS	DATE	NAVAL AMMUNITION PRODUCTION ENGINEERING CENTER GRAND, IN 47332 — DEPARTMENT OF THE NAVY NAVAL SEA SYSTEMS COMMAND WASHINGTON, DC 20362
		EXAMINED			HIGH SECURITY HASP MK-2 MOD-9 HINGED OR SLIDING HORIZONTAL DOOR LEFT HAND STYLE 2
		EXAMINED			
		SAFETY			
		ENGINEER			
		CHECKED			
NEXT ASSY	USED ON	DESIGNED BY	4JUL 84 82		
		APPROVED	22 SEP 1982		
APPLICATION		SCALE FULL			SIZE F; CODE IDENT NO 53711; DRAWING NO 5532335; SHEET 2 OF 3; DATE 9-82

NOTICE: THE IDENTITIES AND DESIGN DETAIL OF THIS DRAWING WERE DEVELOPED BY THE NAVAL AMMUNITION PRODUCTION ENGINEERING CENTER AND ARE UNITED STATES GOVERNMENT PROPERTY

NAVSEA 5532335 SHEET 3 OF 3

NOTES
1. INTERPRET DRAWING IN ACCORDANCE WITH MIL-STD-100.
2. REMOVE BURRS AND SHARP EDGES

ZONE	LTR	REVISIONS DESCRIPTION	DATE	D APPROVAL	C	B
	A	SEE NOR 5532335 A	7/61			

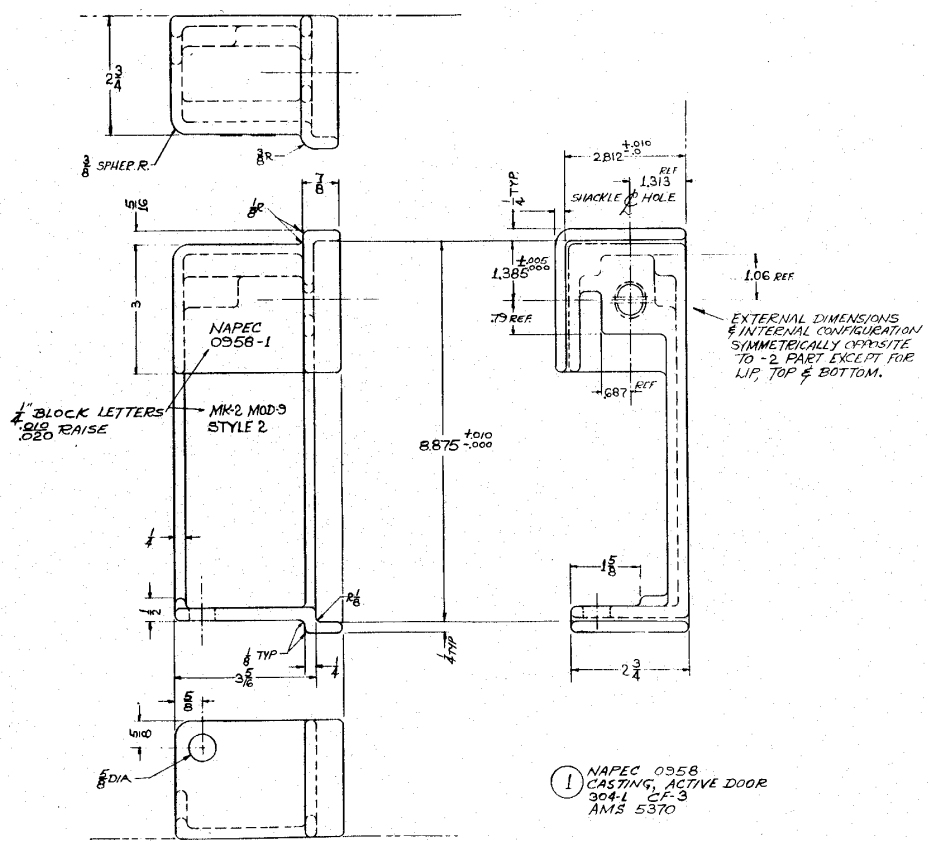

1 NAPEC 0958
CASTING, ACTIVE DOOR
304-L CF-3
AMS 5370

FIND NO.	QTY REQ	CODE IDENT	PART, DRAWING OR SPEC NO.	NOMENCLATURE/DESCRIPTION	REMARKS
-1	1		304L, CF-3	CASTING, ACTIVE DOOR	SEE NOTES SHT 1

PARTS LIST

NEXT ASSY	USED ON
APPLICATION	

SYMBOLS: ITEM; HELD ITEM; ITEM CALLOUT; HELD ITEM CALLOUT

DO NOT SCALE DRAWING UNLESS OTHERWISE SPECIFIED, DIMENSIONS ARE IN INCHES
TOLERANCES: XX DECIMALS ±; XXX DECIMALS ±; FRACTIONS ±; ANGLES ±
SEE NOTE SHT 1
SCALE: FULL

	INITIALS	DATE
EXAMINED		
EXAMINED		
SAFETY		
ENGINEER		
CHECKED		
DESIGNED BY	GJS	4-62
APPROVED		13 SEP 1962

NAVAL AMMUNITION PRODUCTION ENGINEERING CENTER CRANE, IN 47522
DEPARTMENT OF THE NAVY NAVAL SEA SYSTEMS COMMAND WASHINGTON, DC 20362

HIGH SECURITY HASP MK-2 MOD-9
HINGED OR SLIDING HORIZONTAL DOOR
LEFT HAND STYLE 2

SIZE	CODE IDENT NO.	NAVSEA DWG NO.	DATE
F	53711	5532335	9-62

SHEET 3 OF 3

NOTICE: THE CONTENTS AND DESIGN DETAIL OF THIS DRAWING ARE PROPRIETARY TO THE NAVAL AMMUNITION PRODUCTION ENGINEERING CENTER AND ARE LOANED FOR USE AND REFERENCE ONLY.

SERIES 5371-5532336 SHEET 1 OF 5

REVISIONS						
ZONE	LTR	DESCRIPTION	DATE	APPROVAL		
2C 4F	A	ADDED REVISION STATUS BLOCK CHANGED DEPICTION	7-24-83			

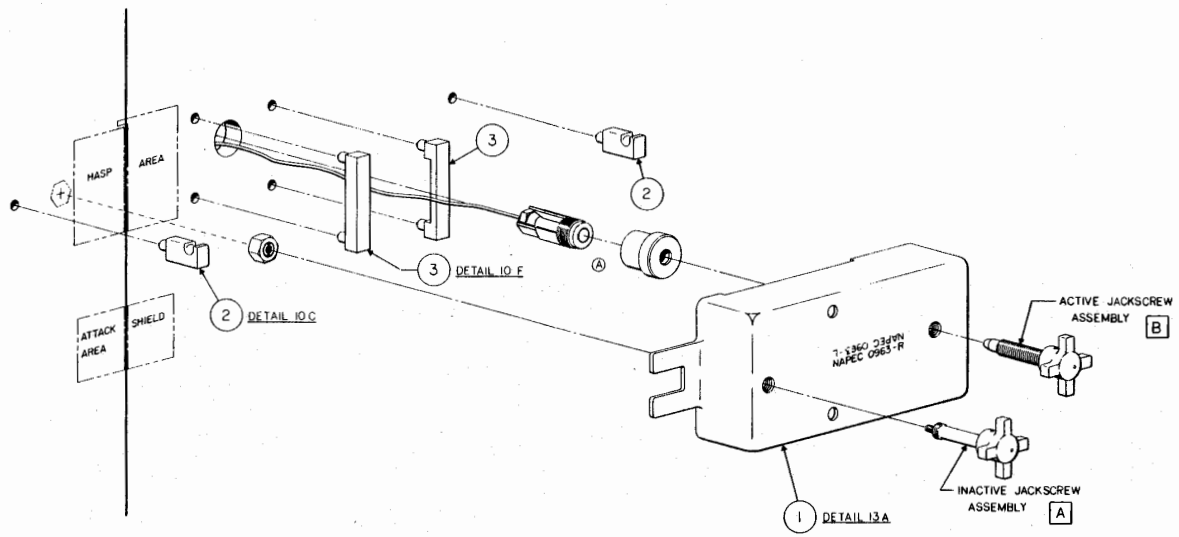

Ⓐ

A	-	A	B	A
A	-	-	A	A
1	2	3	4	5

REVISION STATUS OF SHEETS

ITEM	NOMENCLATURE	ZONE
B	ACTIVE JACKSCREW ASSEMBLY	28 A
A	INACTIVE JACKSCREW ASSEMBLY	20 C

SYMBOLS: ITEM; SEE DETAIL; TRUE POSITION; SEE DETAIL

SCALE: NONE

SIZE: F

APPROVED: LB

DRAWN: GRDH. 3-79

AIB SYSTEM FOR HIGH SECURITY HASP

GENERAL ASSEMBLY

DEPARTMENT OF THE NAVY
NAVAL SEA SYSTEMS COMMAND
NAVAL AMMUNITION PRODUCTION ENGINEERING CENTER
CRANE, INDIANA

DRAWING NO. 5371-5532336

SHEET 1 OF 5

NOTICE: THE INFORMATION SHOWN HEREON IS THE PROPERTY OF THE NAVAL SEA SYSTEMS COMMAND AND MAY NOT BE DISCLOSED TO THE PUBLIC WITHOUT AUTHORITY.

REVISIONS				
ZONE	LTR	DESCRIPTION	DATE	APPROVAL

5371I-5532336 SHEET 2 OF 5

NOTE:

1. INVESTMENT CASTINGS TO MIL-C-6021 CLASS 4
2. FORMERLY NAPEC DWG. NO. 0963 REV. C
3. FINISH NAS-823 C-12
4. REMELT 304L MATL., ACCEPTABLE NO SLAG OR FOREIGN ALLOYS
5. SPCL. NOTE, LINEAR TOLERANCES (CASTING) PER INVESTMENT CASTING HANDBOOK INVESTMENT CASTING INSTITUTE, SEPT. 1979 (NORMAL LINEAR TOLERANCES)

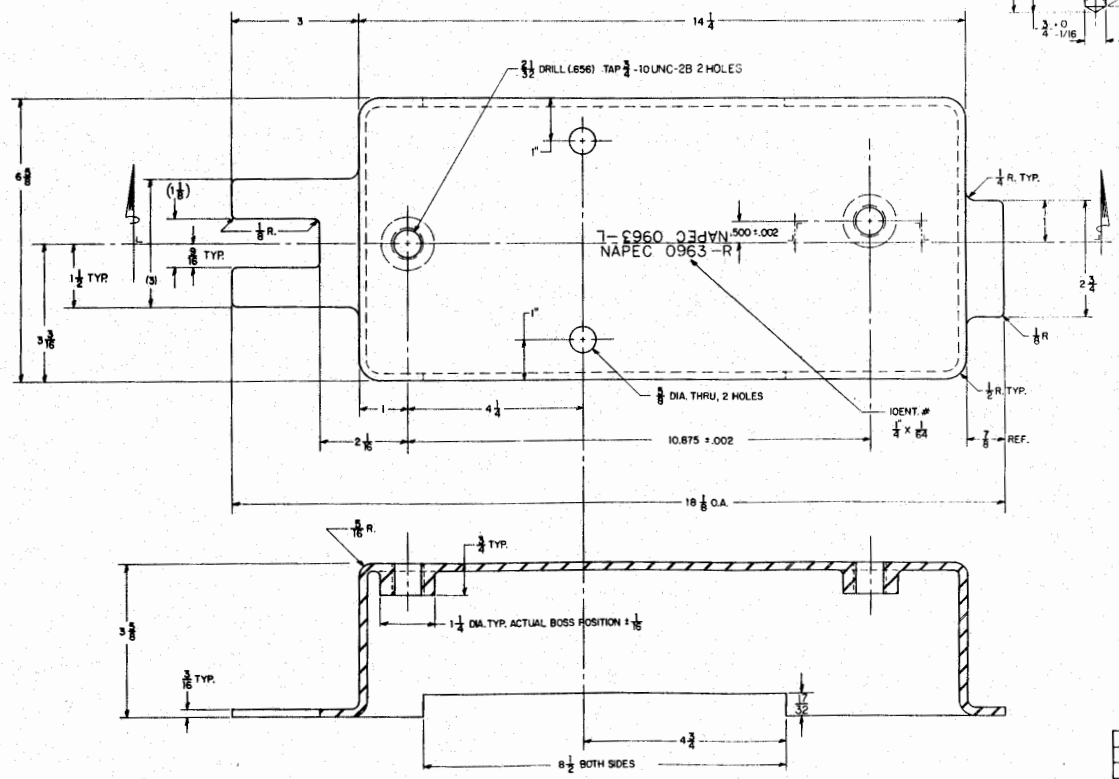

① DETAIL 13A
AIB HOUSING
MATL. STAINLESS TYPE 304L LOW CARBON ASTM A743 (CF-3)
FINISH - GRIT BLAST WITH ALUMINUM OXIDE PER MIL-A-12330 TYPE #1

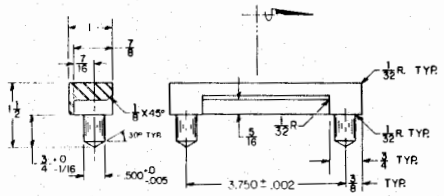

③ DETAIL 10 F
A.I.B. LUG
MATL. SAME AS #1

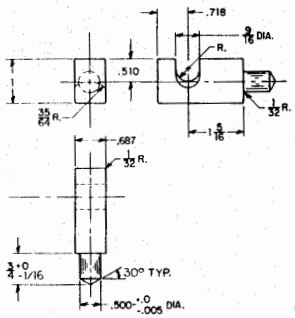

② DETAIL 10 C
A.I.B. STAPLE
MATL. SAME AS #1

ITEM	NOMENCLATURE	REQD.	REMARKS
3	AIB LUG	2	304 L SST
2	AIB STAPLE	2	304L SST
1	AIB HOUSING	1	304L SST

APPROVED		
DESIGNED		
DRAWN	TM	3/79
CHECKED	FROH	3-79
ENGINEER		
SCALE 1/1	SIZE F	

AIB SYSTEM FOR HIGH SECURITY HASP

AIB HOUSING DETAILS

DEPARTMENT OF THE NAVY
NAVAL SEA SYSTEMS COMMAND
NAVAL AMMUNITION PRODUCTION ENGINEERING CENTER
CRANE, INDIANA

DRAWING NO. 5371I-5532336

SHEET 2 OF 5

REVISIONS			
A	SEE NOR 5532336 A		

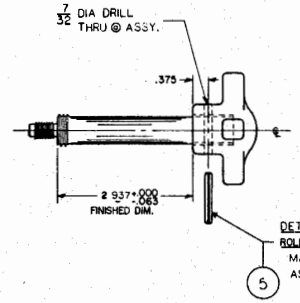

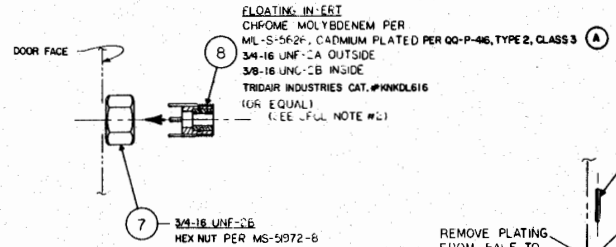

DET 20F

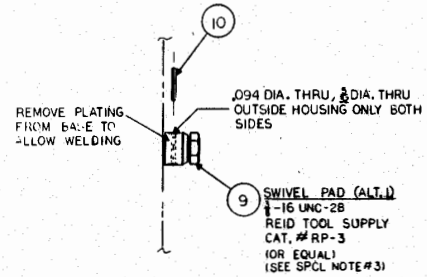

DET 17F

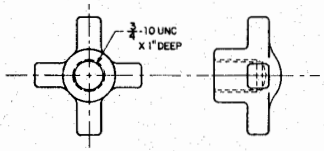

DETAIL 22 D
HAND KNOB
4
MATL: ASTM A48-70, CLASS 30
CARR LANE CAT.#CL-60-HK-6
(OR EQUAL)
(SEE SPCL NOTE #1)

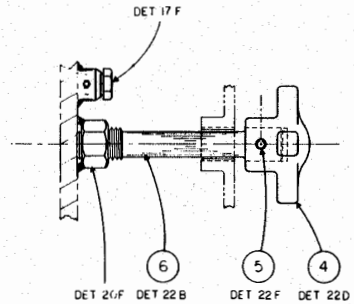

ASSEMBLY 20 C

SPCL NOTES:

1. CARR LANE MANUFACTURING CO.
   4200 CARR LANE COURT
   ST. LOUIS, MO. 63119
2. TRIDAIR INDUSTRIES FASTENER DIVISION
   3000 W. LOMITA BLVD.
   TORRANCE, CALIF.
3. REID TOOL SUPPLY CO.
   MUSKEGON HEIGHTS, MICH.

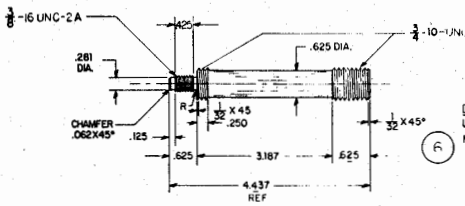

DETAIL 22 B
LOCKING SCREW
6
MATL: ASTM A276 TYPE 304L SOLT CLASS A

ITEM	NOMENCLATURE	REQD.	REMARKS
10	ROLL PIN .094"X.750"	1	
9	SWIVEL PAD (ALTERNATIVE METHOD)	1	
8	FLOATING INSERT	1	
7	3/4-16 UNF-2 HEX NUT	1	
6	LOCKING SCREW	1	
5	ROLL PIN .218"X1.250"	1	
4	HAND KNOB	1	

SCALE 1/1 — SIZE F

AIB SYSTEM
FOR
HIGH SECURITY
HASP

INACTIVE JACKSCREW
SYSTEM DETAILS

DEPARTMENT OF THE NAVY
NAVAL SEA
SYSTEMS COMMAND
NAVAL AMMUNITION PRODUCTION
ENGINEERING CENTER
ORANGE, INDIANA

5378-5532336
SHEET 3 OF 5

REVISIONS					
ZONE	LTR	DESCRIPTION	DATE	APPROVAL	
29C	A	CHANGED DEPICTION	7-23-73		
28C	B	CHANGED BUSHING			

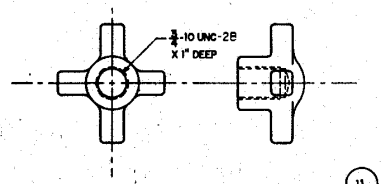

(11) DETAIL 30F
HAND KNOB
SAME AS ITEM 4

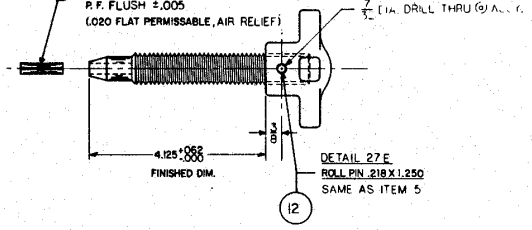

DETAIL 29F
PIN ASTM A108
SAE 1020, COLD DRAWN
.250 DIA. X 1" LG.
P.F. FLUSH ±.005
(.020 FLAT PERMISSABLE, AIR RELIEF)

DETAIL 27E
ROLL PIN .218 X 1.250
SAME AS ITEM 5

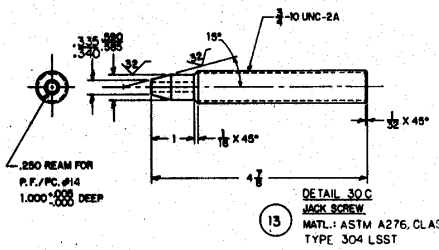

(13) DETAIL 30C
JACK SCREW
MATL.: ASTM A276, CLASS A
TYPE 304 LSST

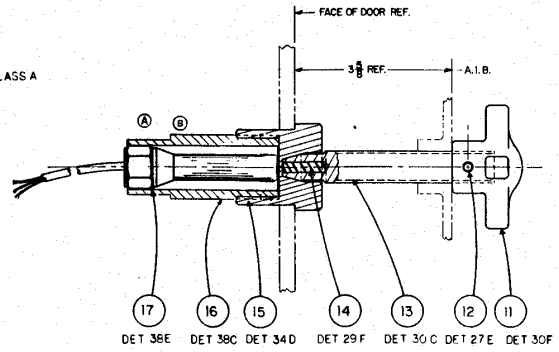

ASSEMBLY 28A

ITEM	NOMENCLATURE	REQD.	REMARKS
17	INTRUSION SENSOR	1	SEE SHEET 5
16	SENSOR BUSHING	1	SEE SHEET 5
15	JACK SCREW BUSHING	1	SEE SHEET 5
14	PIN	1	C.R.S.
13	JACK SCREW	1	304 LSST
12	ROLL PIN .218 X 1.250	1	STD.
11	HAND KNOB	1	

AIB SYSTEM
FOR
HIGH SECURITY
HASP

ACTIVE JACKSCREW
SYSTEM DETAILS

DEPARTMENT OF THE NAVY
NAVAL SEA
SYSTEMS COMMAND
NAVAL AMMUNITION PRODUCTION
ENGINEERING CENTER
CRANE, INDIANA

DRAWING NO. 5371-5532336
SHEET 4 OF 5

SCALE 1/1
SIZE F

5371-5532336
SHEET 4 OF 5

REVISIONS						
38F	A	REFLECT DIMENSION CHANGE				
39C		CHANGED DIMENSIONS				

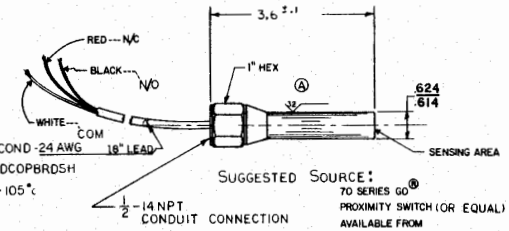

CABLE, SIGNAL - 3 COND - 24 AWG
STRDTNDCOPOVTNDCOPBRDSH
600V, -55°c TO +105°c
ALPHA 3212

SUGGESTED SOURCE:
70 SERIES GO®
PROXIMITY SWITCH (OR EQUAL)
AVAILABLE FROM
GENERAL EQUIPMENT & MFG. CO.
3300 FERN VALLEY RD.
LOUISVILLE, KY.

(17) DETAIL 38 E
INTRUSION SENSOR

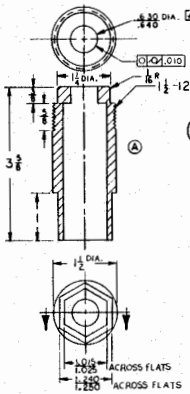

(16) DETAIL 38 C
SENSOR BUSHING
MATL: ASTM A743,
GRADE 304L (CF-3)
SEE NOTE 1

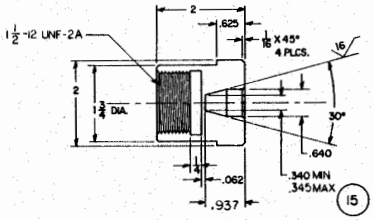

(15) DETAIL 34 D
JACK SCREW BUSHING
MATL: ASTM A276
TYPE 304 LSST

SCALE 1/1	APPROVED	AIB SYSTEM FOR HIGH SECURITY HASP	DEPARTMENT OF THE NAVY NAVAL SEA SYSTEMS COMMAND NAVAL AMMUNITION PRODUCTION ENGINEERING CENTER CRANE, INDIANA
	DRAWN RADH 3-79	ACTIVE JACKSCREW SYSTEM DETAILS	DRAWING NO. 5371-5532336 SHEET 5 OF 5

5371-5532336
SHEET 5 OF 5

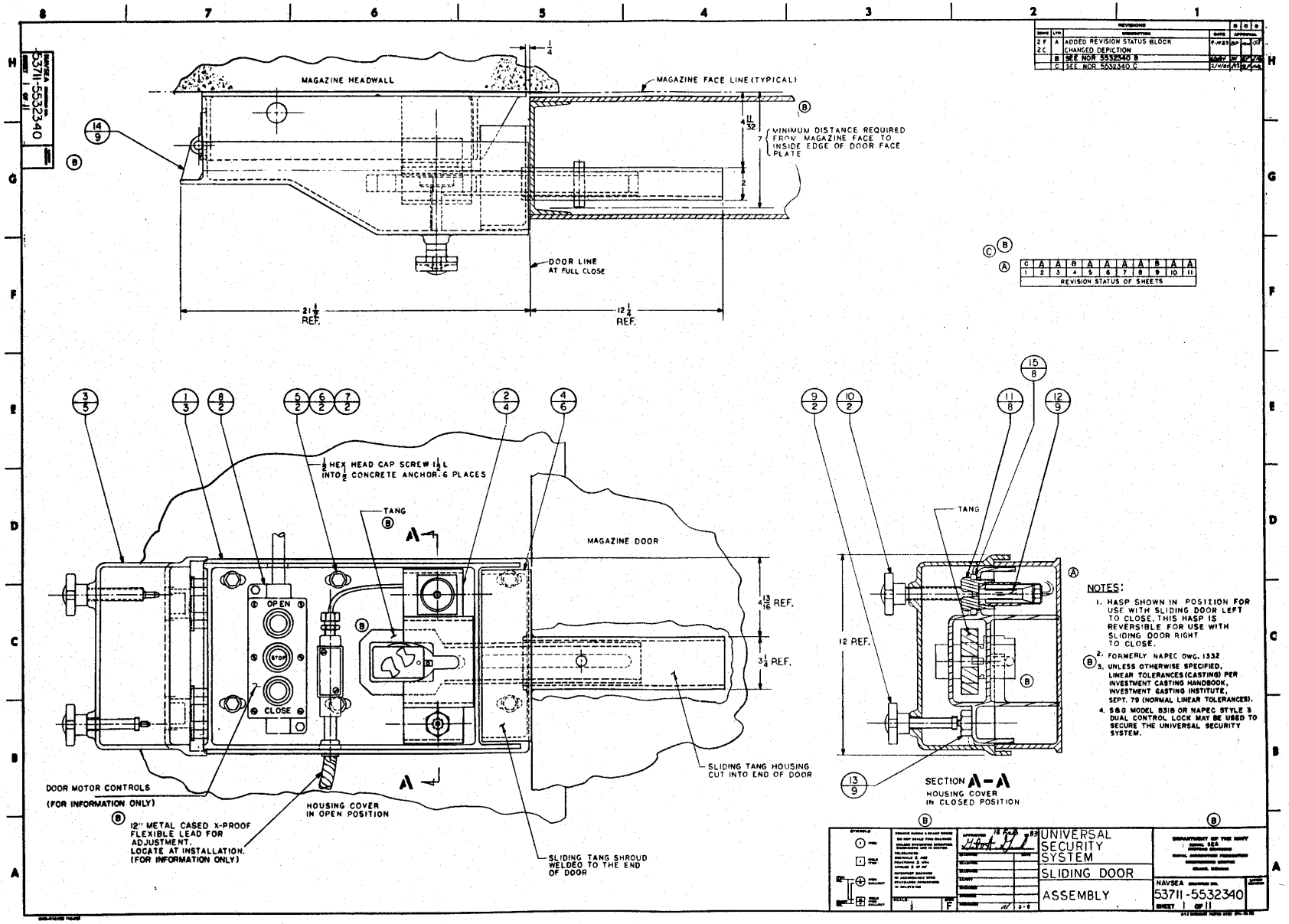
MAGAZINE HEADWALL
MAGAZINE FACE LINE (TYPICAL)
MINIMUM DISTANCE REQUIRED FROM MAGAZINE FACE TO INSIDE EDGE OF DOOR FACE PLATE
DOOR LINE AT FULL CLOSE
21 1/2 REF.
12 1/4 REF.
1/2 HEX HEAD CAP SCREW 1 1/2 L INTO 1/2 CONCRETE ANCHOR, 6 PLACES
TANG
MAGAZINE DOOR
OPEN
STOP
CLOSE
4 13/16 REF.
3 1/4 REF.
12 REF.
DOOR MOTOR CONTROLS (FOR INFORMATION ONLY)
12" METAL CASED X-PROOF FLEXIBLE LEAD FOR ADJUSTMENT. LOCATE AT INSTALLATION. (FOR INFORMATION ONLY)
HOUSING COVER IN OPEN POSITION
SLIDING TANG SHROUD WELDED TO THE END OF DOOR
SLIDING TANG HOUSING CUT INTO END OF DOOR
SECTION A-A
HOUSING COVER IN CLOSED POSITION
NOTES:
1. HASP SHOWN IN POSITION FOR USE WITH SLIDING DOOR LEFT TO CLOSE. THIS HASP IS REVERSIBLE FOR USE WITH SLIDING DOOR RIGHT TO CLOSE.
2. FORMERLY NAPEC DWG. 1332
3. UNLESS OTHERWISE SPECIFIED, LINEAR TOLERANCES (CASTING) PER INVESTMENT CASTING HANDBOOK, INVESTMENT CASTING INSTITUTE, SEPT. 79 (NORMAL LINEAR TOLERANCES).
4. S&G MODEL 831B OR NAPEC STYLE 3 DUAL CONTROL LOCK MAY BE USED TO SECURE THE UNIVERSAL SECURITY SYSTEM.
REVISION STATUS OF SHEETS
UNIVERSAL SECURITY SYSTEM
SLIDING DOOR
ASSEMBLY
NAVSEA 53711-5532340
SHEET 1 OF 11

REVISIONS				
ZONE	LTR	DESCRIPTION	DATE	APPROVED
	A	SEE NOR 5532340 A	14 FEB 95	

NAVSEA DRAWING NO. 53711-5532340 SHEET 2 OF 11

	ITEM	PART/MFD NO	NOMENCLATURE/DESRIPTION	QTY	NOTES	REMARKS
	15		BUSHING SHIM	1		SEE SHEET 8
A	14		HINGE ASSEMBLY	2		SEE SHEET 9
	13		HEX NUT BUSHING ASSEMBLY (INACTIVE JACK SCREW)	1		SEE DETAIL 9
	12		INTRUSION SENSOR ASSEMBLY	1		SEE SHEET 9
	11		ACTIVE JACK SCREW BUSHING	1		SEE DETAIL 8
	10	5532348-2	ACTIVE JACK SCREW ASSEMBLY	1		
A	9	5532348-1	INACTIVE JACK SCREW ASSEMBLY	1		
	8		PUSH BUTTON CONTROL NEMA 4 13	1		INFO. ONLY
	7		1/2-13 UNC-3 EXPANSION ANCHOR	6		INFO. ONLY
	6		1/2 FLAT WASHER	6		INFO. ONLY
	5		1/2-13 UNC-3 HEX HD CAP SCR	6		INFO. ONLY
	4		TANG AND SHROUD ASSEMBLY	1		SEE SHEET 6
	3		MAIN HOUSING COVER	1		SEE DETAIL 5
	2		LOCKING AND SENSOR HOUSING	1		SEE DETAIL 4
	1		MAIN HOUSING BASE	1		SEE DETAIL 1

SYMBOLS

SCALE: 1

SIZE F

APPROVED 18 FEB 95

UNIVERSAL SECURITY SYSTEM

SLIDING DOOR

PARTS LIST

DEPARTMENT OF THE NAVY
NAVAL SEA SYSTEMS COMMAND
NAVAL ORDNANCE PROGRAM
ORDNANCE ENGINEERING
SALUT, OREGON

NAVSEA DRAWING NO. 53711-5532340 SHEET 2 OF 11

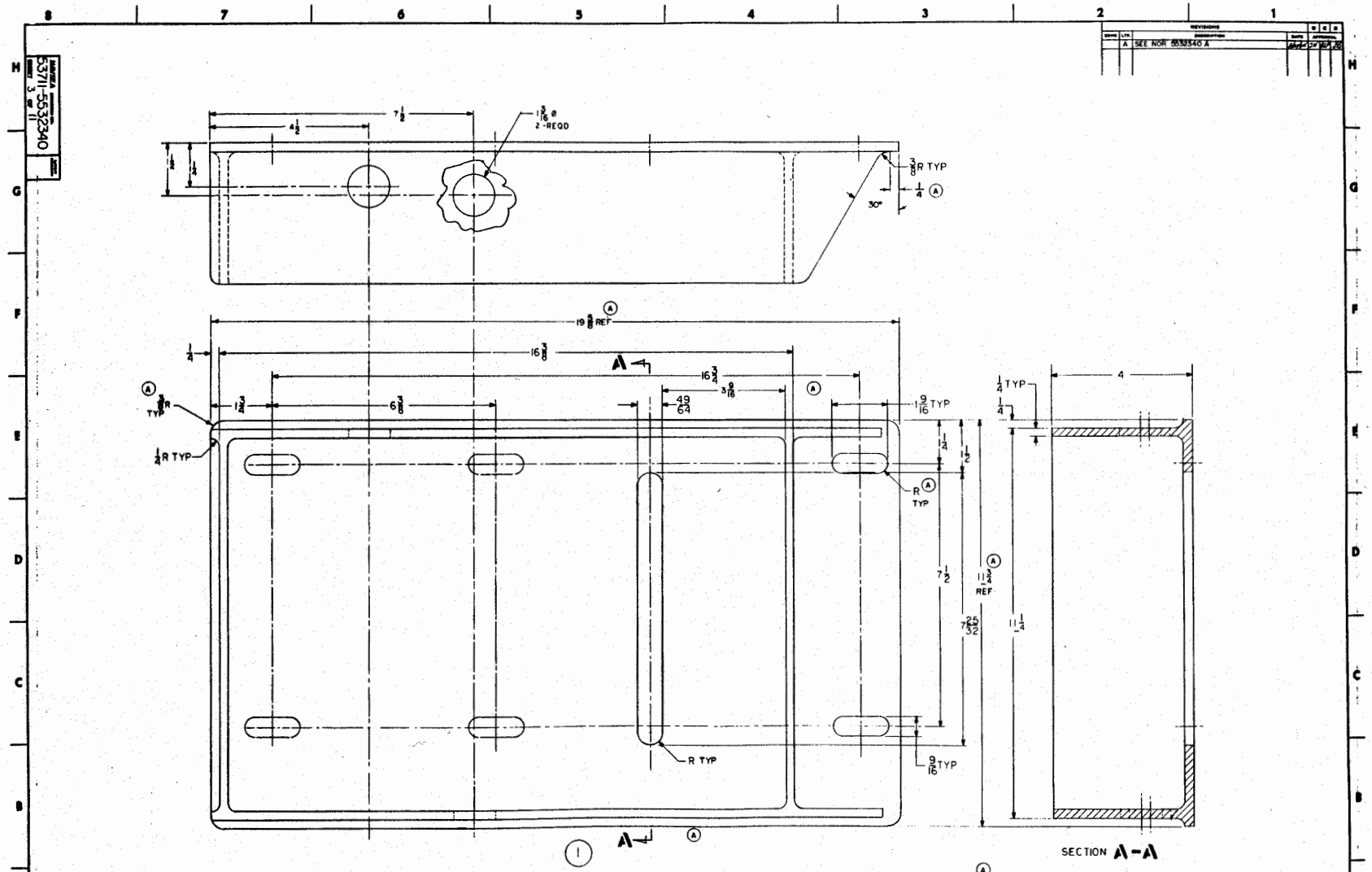

NAME: MAIN HOUSING BASE
NO REQD: ONE (1)
MATL: 316L ASTM A276 CLASS A

REVISIONS			
SYMB	LTR	DESCRIPTION	DATE
	A	SEE NOR 5532340 A	

UNIVERSAL SECURITY SYSTEM
SLIDING DOOR
MAIN HOUSING BASE DETAIL

SCALE 1/1 REV F

DEPARTMENT OF THE NAVY
NAVAL SEA
SYSTEMS COMMAND
NAVAL AMMUNITION PRODUCTION ENGINEERING CENTER
CRANE, INDIANA

NAVSEA DRAWING NO. 5371I-5532340
SHEET 3 OF 11

NAVSEA DRAWING NO. 5371I-5532340
SHEET 3 OF 11

REVISIONS				
	A	SEE NOR 5532340 A		
	B	SEE NOR 5532340C		

NAVSEA 5371I-5532340 SHEET 4 OF 11

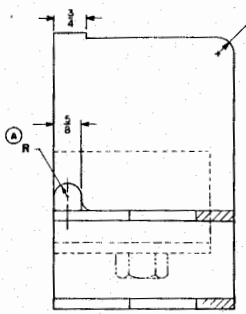

SECT A-A

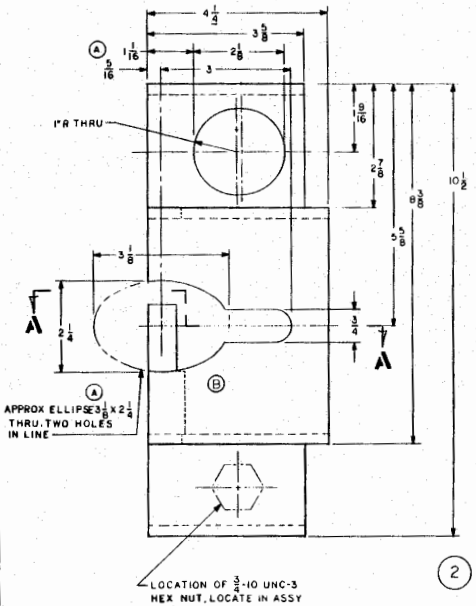

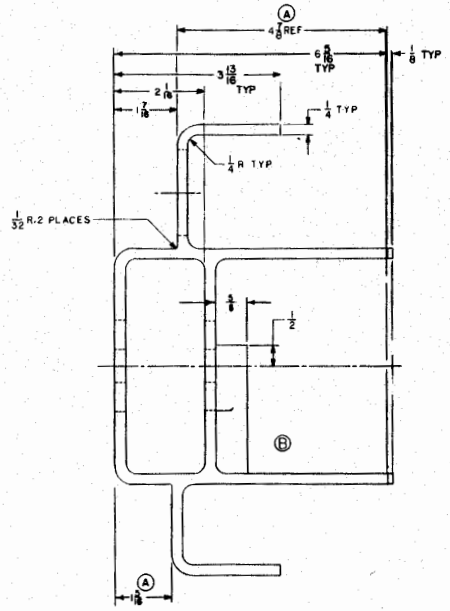

2

NAME: LOCKING AND SENSOR HOUSING
NO REQD: ONE (1)
MATL: 316L ASTM A276 CLASS A

UNIVERSAL SECURITY SYSTEM	DEPARTMENT OF THE NAVY NAVAL SEA SYSTEMS COMMAND	
SLIDING DOOR LOCKING AND SENSOR HOUSING DETAIL	NAVSEA 5371I-5532340 SHEET 4 OF 11	

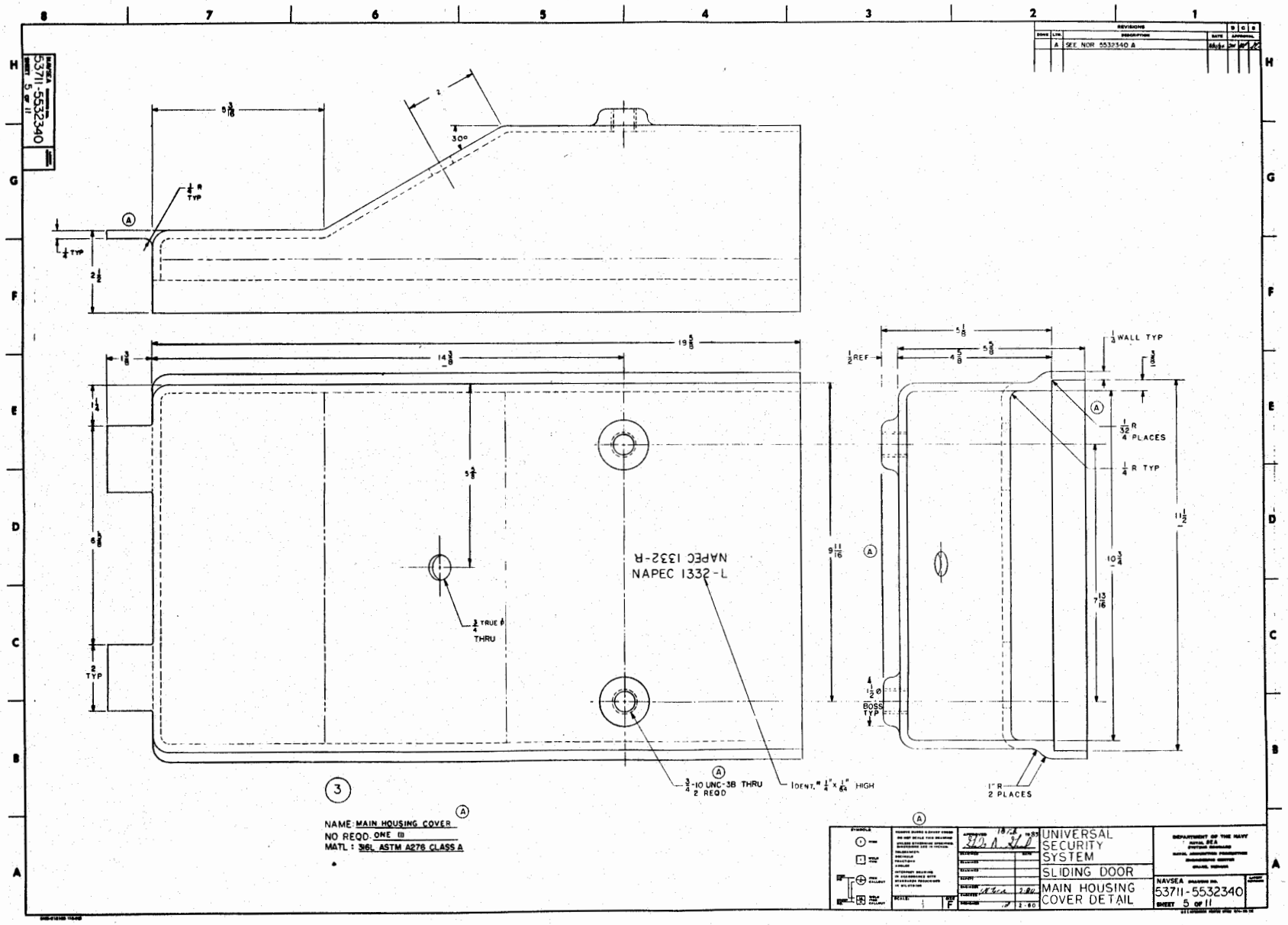
NAME: MAIN HOUSING COVER
NO REQD: ONE (1)
MATL: 316L ASTM A276 CLASS A
UNIVERSAL SECURITY SYSTEM
SLIDING DOOR
MAIN HOUSING COVER DETAIL
NAVSEA 53711-5532340
SHEET 5 of 11
NAPEC 1332-L
NAPEC 1332-R
REVISIONS
A SEE NOR 5532340 A

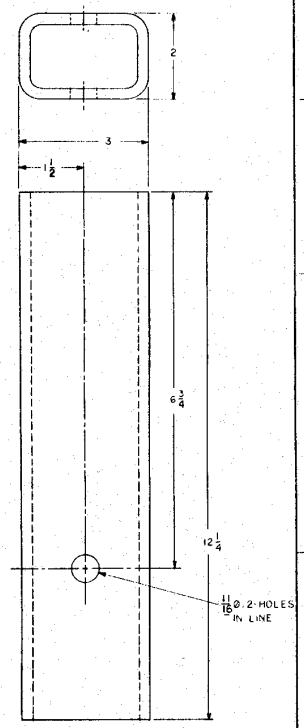

4D

NAME: SLEEVE
NO REQD: ONE (1)
MATL: 3X2X.250 STRUCTURAL STEEL TUBE ASTM-A-500

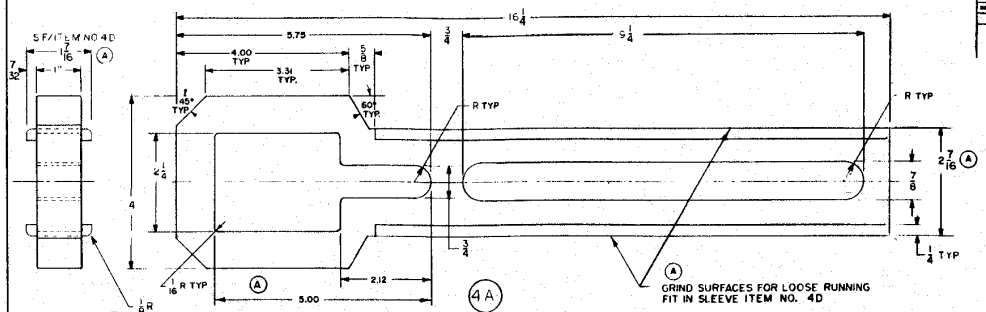

4A

NAME: TANG
NO REQD: ONE (1)
MATL: 316L ASTM A276 CLASS A

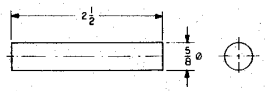

4C

NAME: RETAINING PIN
NO REQD: ONE (1)
MATL: 4620 CF BAR STOCK

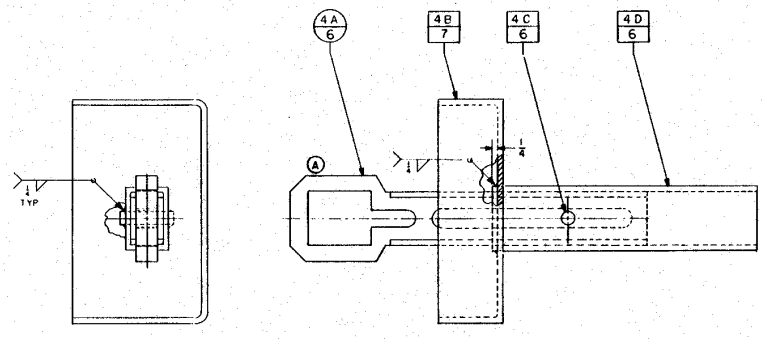

4

NAME: TANG AND SHROUD ASSEMBLY
NO REQD: ONE (1)
SCALE: 1/2

ITEM	NOMENCLATURE	QTY	NOTES	REMARKS
4 D	SLEEVE	1		SEE DETAIL
4 C	RETAINING PIN	1		SEE DETAIL
4 B	SHROUD	1		SEE DETAIL
4 A	TANG	1		SEE DETAIL

UNIVERSAL SECURITY SYSTEM

SLIDING DOOR

TANG AND SHROUD ASSY AND DETAILS

NAVSEA 53711-5532340

SHEET 6 OF 11

SCALE: 1 SIZE F

REVISIONS				
ZONE	LTR	DESCRIPTION	DATE	APPROVAL
	A	SEE NOR 5532340 A		

REVISIONS				
ZONE	LTR	DESCRIPTION	DATE	APPROVAL
	A	SEE NOR 5532340 A		

NAVSEA 53711-5532340 SHEET 7 of 11

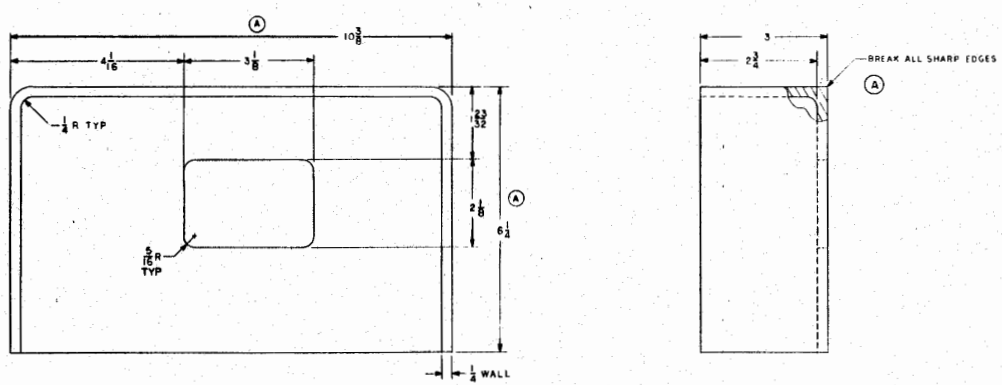

4B

NAME : TANG SHROUD
NO REQD : ONE (1)
MATL : 316L ASTM A276 CLASS A

UNIVERSAL SECURITY SYSTEM

SLIDING DOOR

TANG SHROUD DETAIL

DEPARTMENT OF THE NAVY
NAVAL SEA SYSTEMS COMMAND
NAVAL AMPHIBIOUS PROGRAMS ENGINEERING CENTER
SAN DIEGO, CALIFORNIA

NAVSEA DRAWING NO. 53711-5532340
SHEET 7 OF 11

ZONE	LTR	REVISIONS DESCRIPTION	DATE	APPROVAL
	A	REPLACES 5532340 NO REVISION WITH CHANGE SEE NOR 5532340 A		

NAVSEA 5532340 SHEET 8 OF 11

NOTES
1. INTERPRET DRAWING IN ACCORDANCE WITH DOD STD 100.
2. REMOVE BURRS AND SHARP EDGES

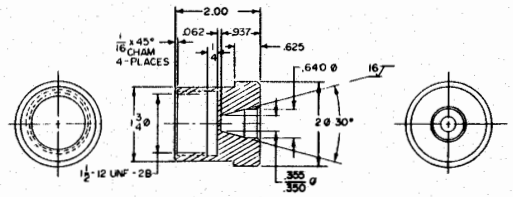

11

NAME: ACTIVE JACKSCREW BUSHING
NO REQD: ONE(1)
MATL: 316L ASTM A276 CLASS A

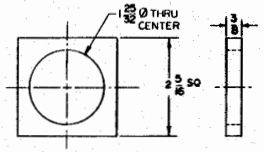

15

NAME: BUSHING SHIM (ACTIVE JACKSCREW)
NO REQD: ONE (1)
MATL: 316L ASTM A276 CLASS A

FIND NO.	QTY REQ	CODE IDENT	PART, DRAWING OR SPEC NO.	NOMENCLATURE/DESCRIPTION	REMARKS

PARTS LIST

NEXT ASSY	USED ON
APPLICATION	

SYMBOLS: ITEM; WELD ITEM; ITEM CALLOUT; WELD ITEM CALLOUT

DO NOT SCALE DRAWING
UNLESS OTHERWISE SPECIFIED, DIMENSIONS ARE IN INCHES.
TOLERANCES:
XX DECIMALS ± .01
XXX DECIMALS ± .005
FRACTIONS ± 1/64
ANGLES ± 1°
SCALE: 1/1

	INITIALS	DATE
DRAWN		
EXAMINED		
SAFETY		
ENGINEER		
CHECKED		
DESIGNED	DW	8/2/99
APPROVED		19

NAVAL AMMUNITION PRODUCTION ENGINEERING CENTER CRANE, IN 47522

DEPARTMENT OF THE NAVY NAVAL SEA SYSTEMS COMMAND WASHINGTON, DC 20362

UNIVERSAL SECURITY SYSTEM

SIZE	CODE IDENT NO.	NAVSEA	DWG NO.
F	53711		5532340

SHEET 8 OF 11

REVISIONS					
ZONE	LTR	DESCRIPTION	DATE	APPROVAL	
7C	A	CHANGED DIMENSIONS			
6C		CHANGED DIMENSIONS			
5C		REFLECT DIMENSION CHANGES			
2C		REFLECT DIMENSION CHANGES	7-MAR-83		
	B	SEE NOR 5532340 A			

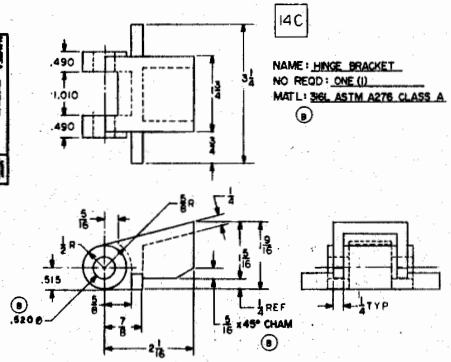

NAME: HINGE BRACKET
NO REQD: ONE (1)
MATL: 316L ASTM A276 CLASS A (B)

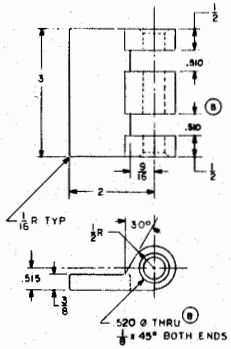

NAME: HINGE PAD
NO REQD: ONE (1)
MATL: 316L ASTM A276 CLASS A (B)

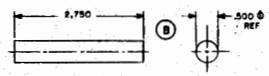

14B

NAME: HINGE PIN
NO REQD: ONE (1)
MATL: 316L ASTM A276 CLASS A (B)

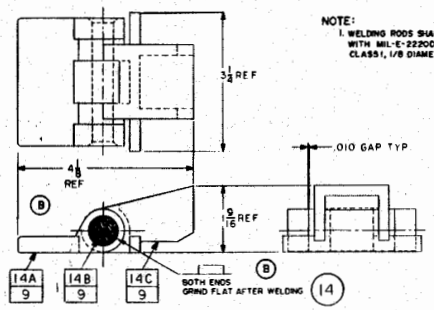

NOTE:
1. WELDING RODS SHALL BE IN ACCORDANCE WITH MIL-E-22200/2, TYPE MIL-310-16, CLASS 1, 1/8 DIAMETER.

ITEM	NOMENCLATURE	REQD	MATL	REMARKS
14C	HINGE BRACKET	1		SEE DETAIL
14B	HINGE PIN	1		
14A	HINGE PAD	1		

NAME: HINGE ASSEMBLY
NO REQD: ONE (1)

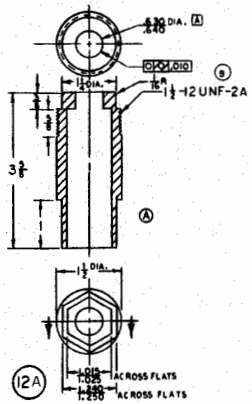

NAME: SENSOR BUSHING
NO REQD: ONE (1)
MATL: 316L ASTM A276 CLASS A (B)

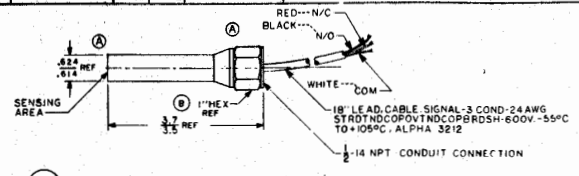

NAME: SENSOR
NO REQD: ONE (1)

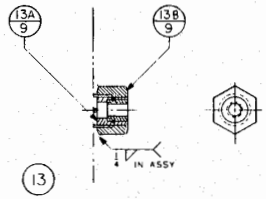

NAME: HEX NUT BUSHING ASSY
(INACTIVE JACK SCREW)
NO REQD: ONE (1)

NOTE:
1. FLOATING INSERT SST (B)
3/4-16UNF-2A OUTSIDE
3/8-16UNC-2B INSIDE
TRIDAIR INDUSTRIES
CAT NO KNNDL616

ITEM	NOMENCLATURE	QTY	NOTES	REMARKS
13B	3/4-16 UNF-2B HEX NUT	1		304 SST
13A	FLOATING INSERT	1	1	

NOTE:
1. MODEL 713729 (B)
SUGGESTED SOURCE:
70 SERIES GO ®
PROXIMITY SWITCH
AVAILABLE FROM
GENERAL EQUIPMENT & MFG CO
3300 FERN VALLEY RD
LOUISVILLE KY
2. SUGGESTED SOURCE:
TENNESSEE INVESTMENT CASTING CO.
RT 2 BLOUNTVILLE HIGHWAY
BRISTOL, TENN. 37620
3. ITEM 12B SHALL BE INSTALLED FLUSH TO 1/16 BELOW SURFACE A AS SHOWN USING ADHESIVE, MIL-A-46050, TYPE I, CLASS 2. ADHESIVE SHALL BE APPLIED 360 DEG MIN

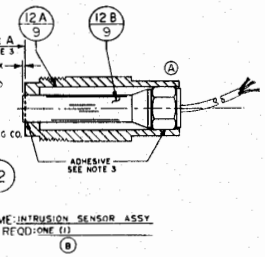

NAME: INTRUSION SENSOR ASSY
NO REQD: ONE (1) (B)

ITEM	NOMENCLATURE	QTY	NOTES	REMARKS
12B	SENSOR	1	1	
12A	SENSOR BUSHING	1	2	

18 Oct 83	UNIVERSAL SECURITY SYSTEM	DEPARTMENT OF THE NAVY NAVAL SEA SYSTEMS COMMAND NAVAL AMMUNITION PRODUCTION ENGINEERING CENTER ST. LOUIS, MISSOURI	
	SLIDING DOOR	NAVSEA DRAWING NO.	
	INTRUSION SENSOR ASSY. HEX NUT BUSHING ASSY. HINGE ASSY AND DETAILS	53711-5532340	
		SHEET 9 OF 11	

NAVSEA DRAWING NO. 53711-5532340 SHEET 9 OF 11

REVISIONS						
ZONE	LTR	DESCRIPTION	DATE	D	C	B
	A	SEE NOR 5532340 A		APPROVAL		

NAVSEA 53711-5532340 SHEET 10 OF 11

NOTES
1. INTERPRET DRAWING IN ACCORDANCE WITH DOD-STD-100.
2. REMOVE BURRS AND SHARP EDGES
3. WELDING RODS SHALL BE IN ACCORDANCE WITH MIL-E-22200/2, TYPE MIL-310-16, CLASS 1, 1/8 DIAMETER.

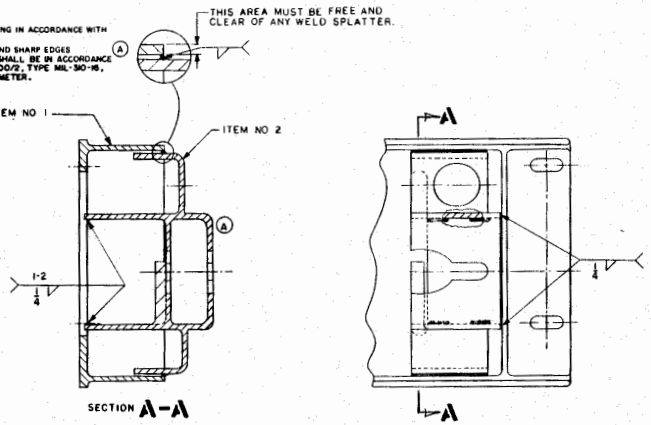

STEP 1
INSERT LOCKING AND SENSOR HOUSING, ITEM NO 2 INTO MAIN HOUSING BASE, ITEM NO 1 AND WELD IN PLACE AS SHOWN.

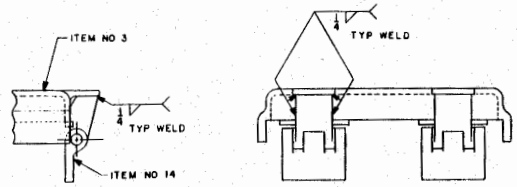

STEP 2
POSITION TWO (2) HINGE ASSEMBLIES, ITEM NO 14, AGAINST TAIL PIECES OF MAIN HOUSING COVER, ITEM NO 3. WELD IN PLACE AS SHOWN.

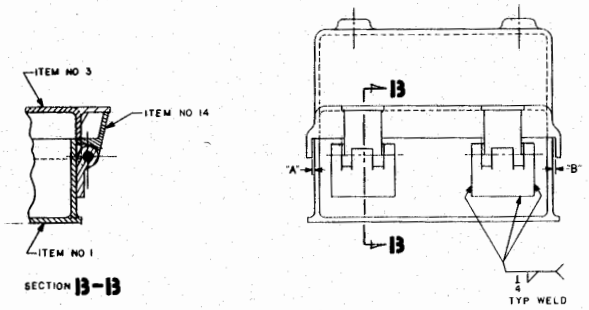

STEP 3
POSITION MAIN HOUSING ITEM NO 3 WITH HINGE ASSEMBLIES ATTACHED ONTO MAIN HOUSING BASE, ITEM NO 1, SO THAT THE INSIDE OF HOUSING COVER WALL AND OUTSIDE OF BASE WALL ARE ALIGNED IN THE AREA OF HINGES. COVER TO BE POSITIONED SO THAT THE DISTANCE "A" AND "B" SHOWN ARE RELATIVELY EQUAL. WELD HINGE ASSEMBLY, ITEM NO 14, TO MAIN HOUSING BASE, ITEM NO 1, AS SHOWN.

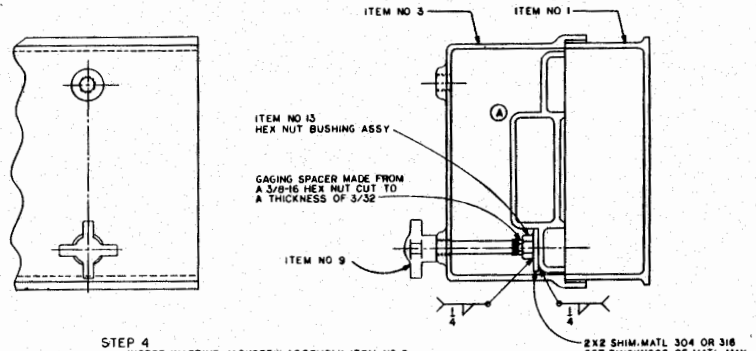

STEP 4
INSERT INACTIVE JACKSREW ASSEMBLY ITEM NO 9 THROUGH MAIN HOUSING COVER, ITEM NO 3. THEAD GAGING SPACER ONTO INACTIVE JACKSCREW AS FAR AS POSSIBLE AND THREAD INACTIVE JACKSCREW NUT, ITEM NO 13, AGAINST GAGING SPACER.

DETERMINE THICKNESS OF SHIM MATERIAL REQUIRED BETWEEN LOCKING AND SENSOR HOUSING, ITEM NO 2, AND INACTIVE JACKSCREW NUT. TACK WELD SHIM AND NUT TO MAINTAIN POSITION. OPEN MAIN HOUSING COVER AND FINISH WELDS AS SHOWN.
REMOVE SPACER AND SAVE FOR NEXT LOCKING SYSTEM.

FIND NO.	QTY REQ	CODE IDENT	PART, DRAWING OR SPEC NO.	NOMENCLATURE/DESCRIPTION	REMARKS

PARTS LIST

NEXT ASSY	USED ON
APPLICATION	

SYMBOLS: ITEM; WELD ITEM; ITEM CALLOUT; WELD ITEM CALLOUT

DO NOT SCALE DRAWING
UNLESS OTHERWISE SPECIFIED DIMENSIONS ARE IN INCHES
TOLERANCES:
XX DECIMALS ±
XXX DECIMALS ±
FRACTIONS ±
ANGLES ±
SCALE:

	INITIALS	DATE
EXAMINED		
EXAMINED		
SAFETY		
ENGINEER		
CHECKED		
DRAWN		9-80
APPROVED		

NAVAL AMMUNITION PRODUCTION ENGINEERING CENTER ERIE, PA 16511
DEPARTMENT OF THE NAVY NAVAL SEA SYSTEMS COMMAND WASHINGTON, DC 20362

UNIVERSAL SECURITY SYSTEM
SLIDING DOOR
HOUSING, TANG AND SHROUD ASSY

SIZE	CODE IDENT NO.	NAVSEA	DWG NO.
F	53711		5532340

SHEET 10 OF 11

REVISIONS					
ZONE	LTR	DESCRIPTION	DATE	APPROVAL	
	A	SEE NOR 5532340 A			

NAVSEA 53711-5532340 SHEET 11 OF 11

NOTES
1. INTERPRET DRAWING IN ACCORDANCE WITH DOD STD 100.
2. REMOVE BURRS AND SHARP EDGES
3. WELDING RODS SHALL BE IN ACCORDANCE WITH MIL-E-22200/2A, TYPE MIL-310-16, CLASS 1, 1/8 DIAMETER. (A)

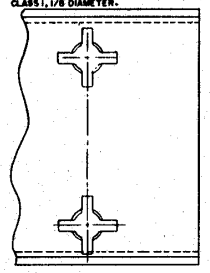

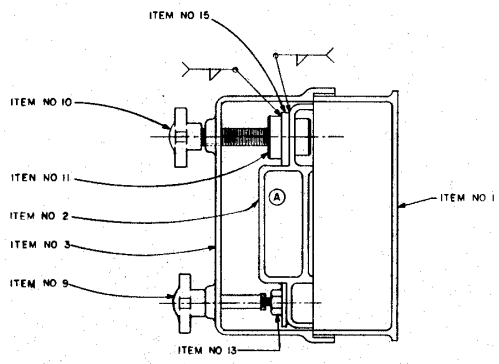

STEP 5
THREAD ACTIVE JACKSCREW ASSEMBLY, ITEM NO 10 THROUGH MAIN HOUSING COVER ITEM NO 3. LOCATE BUSHING SHIM, ITEM NO 15, AND SENSOR BUSHING, ITEM NO 11, SO THAT ACTIVE JACKSCREW WILL ALIGN THEM CORRECTLY IN THE HOLE CAST IN LOCKING AND SENSOR HOUSING, ITEM NO 2.

LOCK THE MAIN HOUSING COVER SECURELY AGAINST THE MAIN HOUSING BASE, ITEM NO 1, BY THREADING INACTIVE JACKSCREW, ITEM NO 9, INTO INACTIVE JACKSCREW NUT, ITEM NO 13, UNTIL HAND-TIGHT. TACKWELD ITEMS 11 AND 15 TO ITEM NO 2 IF ALIGNMENT OF ITEM ON 11 AND 15 ARE SATISFACTORY. OPEN COVER AND FINISH WELDS.

STEP 6
FABRICATE SLEEVE ITEM 4D INCLUDING CUTTING TO LENGTH AND DRILLING RETAINING PIN HOLE ACCORDING TO SHEET 6.

STEP 7
FABRICATE RETAINING PIN ACCORDING TO SHEET 6.

INSERT SLEEVE ITEM 4D THROUGH HOLE IN SHROUD ITEM 4B AND WELD ACCORDING TO SHEET 6.

STEP 8
INSERT TANG ITEM 4A INTO SLEEVE ITEM 4D AS SHOWN ON SHEET 6. GRIND TANG AS REQUIRED TO ALLOW LOOSE RUNNING FIT. (A)

STEP 9
INSERT RETAINING PIN ITEM 4C THROUGH HOLE IN SLEEVE ITEM 4D AND THROUGH SLOT IN TANG ITEM 4A AS SHOWN ON SHEET 6.
WELD PIN TO SLEEVE AT BOTH ENDS.

FIND NO.	QTY REQ	CODE IDENT	PART, DRAWING OR SPEC NO.	NOMENCLATURE/DESCRIPTION	REMARKS

PARTS LIST

SYMBOLS: (1) ITEM; 1 WELD ITEM; ITEM 1A (1) ITEM CALLOUT; SHEET 1 1A WELD ITEM CALLOUT

DO NOT SCALE DRAWING — UNLESS OTHERWISE SPECIFIED, DIMENSIONS ARE IN INCHES. TOLERANCES: XX DECIMALS ±; XXX DECIMALS ±; FRACTIONS ±; ANGLES ±. SCALE:

	INITIALS	DATE
EXAMINED		
EXAMINED		
SAFETY		
ENGINEER		
CHECKED		
DESIGNED	GJ	9-80

APPROVED 18 Feb 1983 HOA Y.J

NAVAL AMMUNITION PRODUCTION ENGINEERING CENTER CRANE, IN 47522
DEPARTMENT OF THE NAVY NAVAL SEA SYSTEMS COMMAND WASHINGTON, DC 20362

UNIVERSAL SECURITY SYSTEM
SLIDING DOOR
HOUSING, TANG AND SHROUD ASSY

SIZE F | CODE IDENT NO. 53711 | NAVSEA | DWG NO. 5532340 | SHEET 11 OF 11

NEXT ASSY | USED ON
APPLICATION

REVISIONS					
ZONE	LTR	DESCRIPTION	DATE	APPROVAL	
	A	SEE NOR 5532345 A			

NOTES
1. INTERPRET DRAWING IN ACCORDANCE WITH DOD STD-100.
2. REMOVE BURRS AND SHARP EDGES
3. USE WELDING ROD 5/0-16 3/32 DIA.

A	A	A
1	2	3

REVISION STATUS OF SHEETS

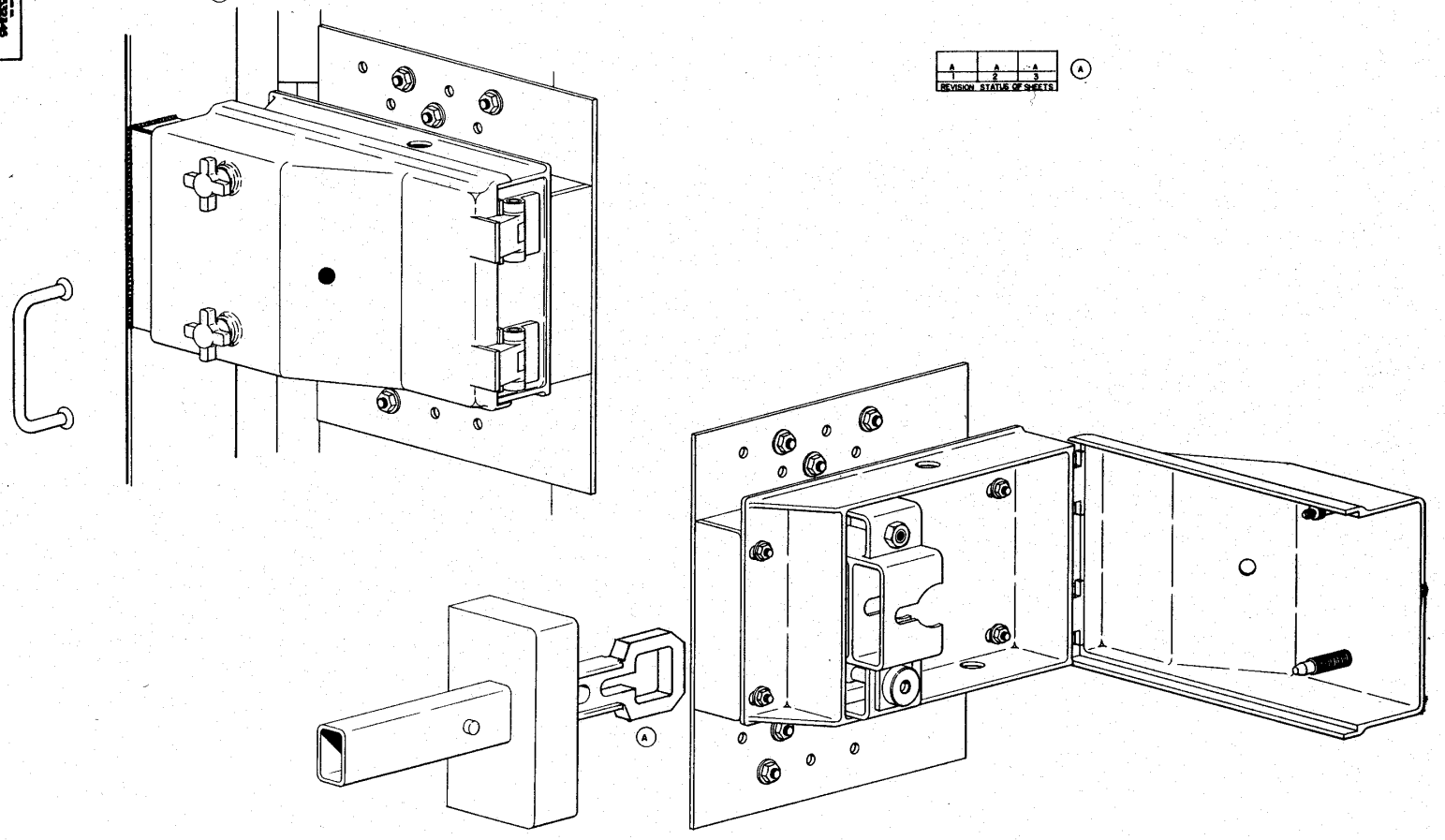

FIND NO.	QTY REQ	CODE IDENT	PART, DRAWING OR SPEC NO.	NOMENCLATURE/DESCRIPTION	REMARKS

PARTS LIST

NEXT ASSY	USED ON
	APPLICATION

SYMBOLS: ITEM; WELD ITEM; ITEM CALLOUT; WELD ITEM CALLOUT

DO NOT SCALE DRAWING
UNLESS OTHERWISE SPECIFIED, DIMENSIONS ARE IN INCHES.
TOLERANCES:
XX DECIMALS ±
XXX DECIMALS ±
FRACTIONS ±
ANGLES ±
SCALE:

	INITIALS	DATE
EXAMINED		
EXAMINED		
SAFETY		
ENGINEER		
CHECKED		
DRAFTSMAN		
APPROVED		

NAVAL AMMUNITION PRODUCTION ENGINEERING CENTER
GRAND, IN 47832

DEPARTMENT OF THE NAVY
NAVAL SEA SYSTEMS COMMAND
WASHINGTON, DC 20362

UNIVERSAL SECURITY SYSTEM OVAL ARCH
Sliding Door Installation Procedures MAGAZINE

SIZE	CODE IDENT NO.	NAVSEA DWG NO.
F	53711	5532345

SHEET 1 OF 3

REVISIONS					
ZONE	LTR	DESCRIPTION	DATE	D	C	B APPROVAL
	A	SEE NOR 5532345 A			

NAVSEA DWG NO. 5532345 SHEET 2 OF 3

NOTES:
1. INTERPRET DRAWING IN ACCORDANCE WITH DOD STD-100.
2. REMOVE BURRS AND SHARP EDGES & USE WELDING ROD SO-16, 3/32 DIA. (A)

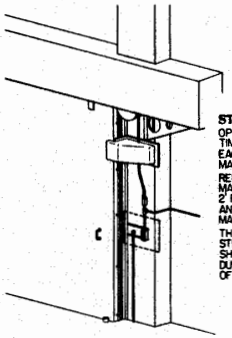

STEP 1
OPEN AND CLOSE MAGAZINE DOOR SEVERAL TIMES NOTING THE POSITION OF THE DOOR EACH TIME IT STOPS IN THE CLOSED POSITION. MARK THIS POSITION ON THE HEADWALL.

REMOVE ANY OBSTRUCTIONS FROM THE MAGAZINE HEADWALL IN AREA APPROXIMATELY 2' RIGHT OF THE DOOR (IN CLOSED POSITION) AND AT A HEIGHT 3' TO 5' ABOVE THE MAGAZINE APRON.

THE DOOR EMERGENCY STOP ACTUATOR STRIP LOCATED ON THE END OF THE DOOR SHOULD BE REMOVED TO PREVENT DAMAGE DURING THE CUTTING AND WELDING PHASES OF THE INSTALLATION.

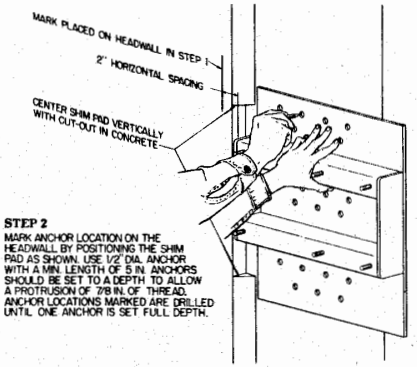

STEP 2
MARK ANCHOR LOCATION ON THE HEADWALL BY POSITIONING THE SHIM PAD AS SHOWN. USE 1/2" DIA. ANCHOR WITH A MIN. LENGTH OF 5 IN. ANCHORS SHOULD BE SET TO A DEPTH TO ALLOW A PROTRUSION OF 7/8 IN. OF THREAD. ANCHOR LOCATIONS MARKED ARE DRILLED UNTIL ONE ANCHOR IS SET FULL DEPTH.

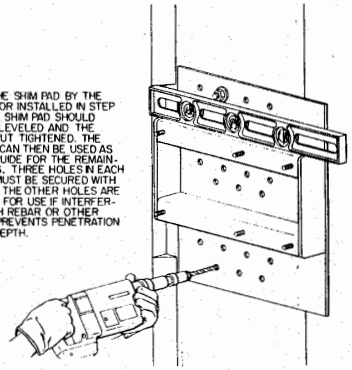

STEP 3
ATTACH THE SHIM PAD BY THE ONE ANCHOR INSTALLED IN STEP NO. 2. THE SHIM PAD SHOULD THEN BE LEVELED AND THE ANCHOR NUT TIGHTENED. THE SHIM PAD CAN THEN BE USED AS A DRILL GUIDE FOR THE REMAINING HOLES. THREE HOLES IN EACH SECTION MUST BE SECURED WITH ANCHORS, THE OTHER HOLES ARE PROVIDED FOR USE IF INTERFERENCE WITH REBAR OR OTHER OBJECTS PREVENTS PENETRATION TO FULL DEPTH.

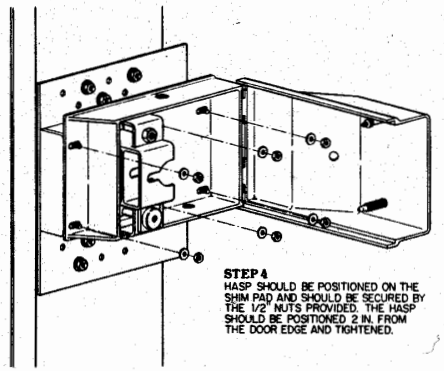

STEP 4
HASP SHOULD BE POSITIONED ON THE SHIM PAD AND SHOULD BE SECURED BY THE 1/2" NUTS PROVIDED. THE HASP SHOULD BE POSITIONED 2 IN. FROM THE DOOR EDGE AND TIGHTENED.

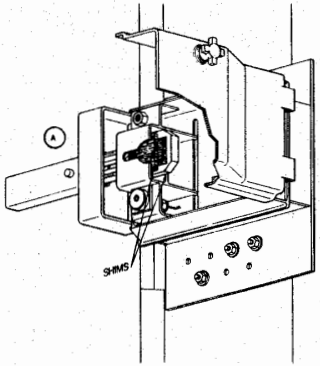

STEP 5
THE TANG AND SHROUD ASSEMBLY SHOULD THEN BE INSERTED INTO THE LOCK HOUSING AND THE TANG SHIMMED IN THE CENTER OF THE LOCK HOUSING.

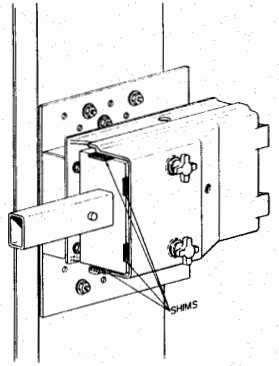

STEP 6
CLOSE COVER AND FASTEN SECURELY USING TWO JACKSCREWS.

INSERT WOODEN SHIM BETWEEN THE SHROUD AND THE COVER AS SHOWN TO CENTER THE SHROUD ASSEMBLY.

FIND NO.	QTY REQ	CODE IDENT	PART, DRAWING OR SPEC NO.	NOMENCLATURE/DESCRIPTION	REMARKS

PARTS LIST

NEXT ASSY	USED ON
APPLICATION	

SYMBOLS: (1) ITEM; [1] WELD ITEM; ITEM NO. / SHEET NO. (1) ITEM CALLOUT; [1] WELD ITEM CALLOUT

DO NOT SCALE DRAWING
UNLESS OTHERWISE SPECIFIED, DIMENSIONS ARE IN INCHES.
TOLERANCES
XX DECIMALS ±
XXX DECIMALS ±
FRACTIONS ±
ANGLES ±
SCALE

	INITIALS	DATE
EXAMINED		
EXAMINED		
SAFETY		
ENGINEER		
CHECKED		
DESIGNED		

APPROVED 2 Aug 88 18B/

NAVAL AMMUNITION PRODUCTION ENGINEERING CENTER CRANE, INDIANA

DEPARTMENT OF THE NAVY NAVAL SEA SYSTEMS COMMAND WASHINGTON, D.C. 20362

UNIVERSAL SECURITY SYSTEM OVAL ARCH MAGAZINE
Sliding Door Installation Procedures

SIZE F | CODE IDENT NO. 53711 | NAVSEA DWG NO 5532345 | SHEET 2 OF 3

REVISIONS					
ZONE	LTR	DESCRIPTION	DATE	APPROVAL	
	A	SEE NOR 5532345 A			

NAVSEA 5532345 SHEET 3 OF 3

NOTES
1. INTERPRET DRAWING IN ACCORDANCE WITH DOD STD 100.
2. REMOVE BURRS AND SHARP EDGES
3. USE WELDING ROD 3D-16, 3/32 DIA. (A)

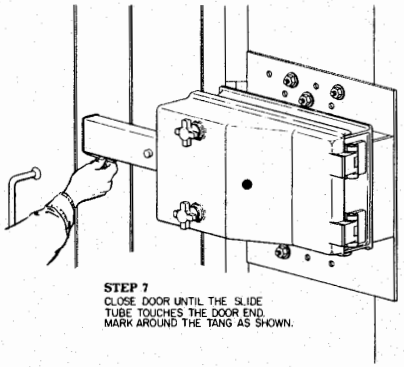

STEP 7
CLOSE DOOR UNTIL THE SLIDE TUBE TOUCHES THE DOOR END. MARK AROUND THE TANG AS SHOWN.

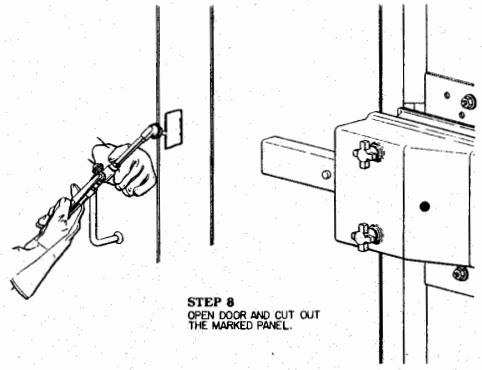

STEP 8
OPEN DOOR AND CUT OUT THE MARKED PANEL.

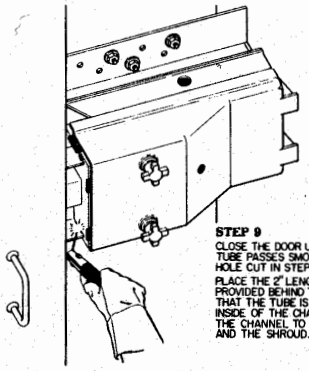

STEP 9
CLOSE THE DOOR UNTIL THE PROTRUDING TUBE PASSES SMOOTHLY THROUGH THE HOLE CUT IN STEP 8.

PLACE THE 2" LENGTH OF 10" CHANNEL PROVIDED BEHIND THE TANG TUBE SO THAT THE TUBE IS CENTERED IN THE INSIDE OF THE CHANNEL. TACK WELD THE CHANNEL TO BOTH THE DOOR END AND THE SHROUD.

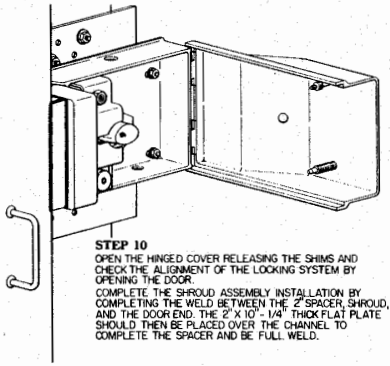

STEP 10
OPEN THE HINGED COVER RELEASING THE SHIMS AND CHECK THE ALIGNMENT OF THE LOCKING SYSTEM BY OPENING THE DOOR.

COMPLETE THE SHROUD ASSEMBLY INSTALLATION BY COMPLETING THE WELD BETWEEN THE 2" SPACER, SHROUD, AND THE DOOR END. THE 2" X 10" - 1/4" THICK FLAT PLATE SHOULD THEN BE PLACED OVER THE CHANNEL TO COMPLETE THE SPACER AND BE FULL WELD.

STEP 11
THE HASP SHOULD THEN BE WELDED TO THE SHIM PAD. 1 - 4 1/4 IN. FILLET WELDS SHOULD BE PLACED ALONG THE TOP AND BOTTOM OF THE SHIM PAD TUBES.

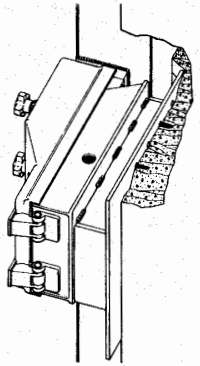

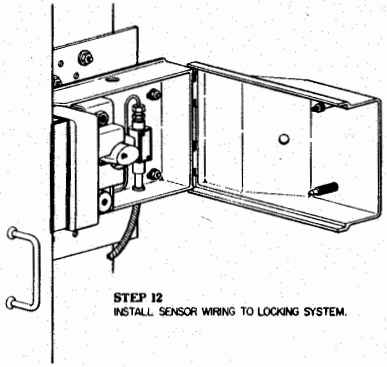

STEP 12
INSTALL SENSOR WIRING TO LOCKING SYSTEM.

FIND NO.	QTY REQ	CODE IDENT	PART, DRAWING OR SPEC NO.	NOMENCLATURE/DESCRIPTION	REMARKS

PARTS LIST

NEXT ASSY	USED ON
APPLICATION	

SYMBOLS: ITEM; WELD ITEM; ITEM CALLOUT; WELD ITEM CALLOUT

DO NOT SCALE DRAWING
UNLESS OTHERWISE SPECIFIED, DIMENSIONS ARE IN INCHES
TOLERANCES:
XX DECIMALS ±
XXX DECIMALS ±
FRACTIONS ±
ANGLES ±
SCALE:

	INITIALS	DATE
EXAMINED		
EXAMINED		
SAFETY		
ENGINEER		
CHECKED		
APPROVED		

APPROVED by J.E.C. 19 J.C.

NAVAL AMMUNITION PRODUCTION ENGINEERING CENTER
CRANE, IN 47522

DEPARTMENT OF THE NAVY
NAVAL SEA SYSTEMS COMMAND
WASHINGTON, DC 20362

UNIVERSAL SECURITY SYSTEM
Sliding Door Installation Procedures

OVAL ARCH MAGAZINE

SIZE	CODE IDENT NO.	NAVSEA DWG NO.
F	63711	5532345

SHEET 3 OF 3

REVISION STATUS OF SHEETS			
SHEET NO	1	2	3
REVISION	A	B	A

REVISIONS					
ZONE	LTR	DESCRIPTION	DATE	APPROVAL	
C5	A	CHANGED TANG	5/22/88		

NOTES
1. INTERPRET DRAWING IN ACCORDANCE WITH DOD-STD-100.
2. REMOVE BURRS AND SHARP EDGES
3. S&G MODEL 6815 OR NAPEC STYLE 3 DUAL CONTROL LOCK MAY BE USED TO SECURE THE UNIVERSAL SECURITY SYSTEM.

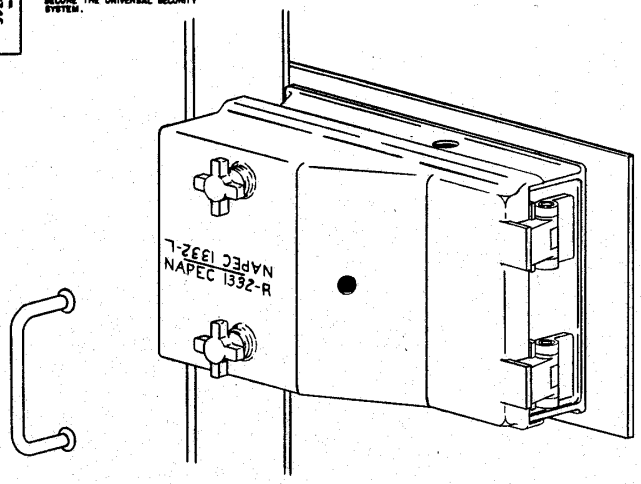

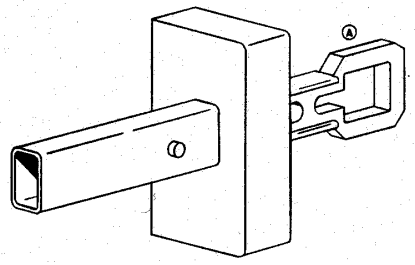

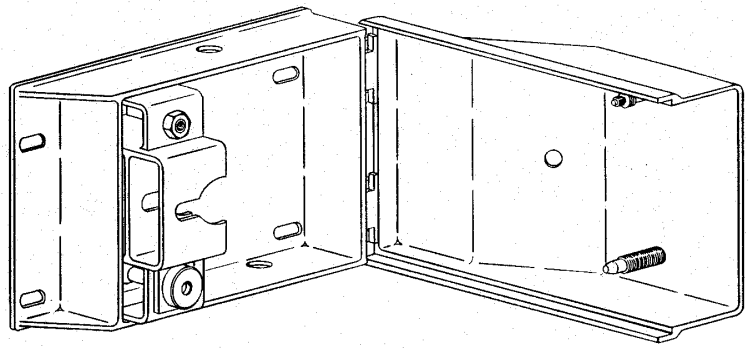

FIND NO.	QTY REQ	CODE IDENT	PART, DRAWING OR SPEC NO.	NOMENCLATURE/DESCRIPTION	REMARKS

PARTS LIST

NEXT ASSY	USED ON		
APPLICATION			

SYMBOLS: ITEM; WELD ITEM; ITEM CALLOUT; WELD ITEM CALLOUT

DO NOT SCALE DRAWING
UNLESS OTHERWISE SPECIFIED, DIMENSIONS ARE IN INCHES
TOLERANCES
XX DECIMALS ±
XXX DECIMALS ±
FRACTIONS ±
ANGLES ±
SCALE NOTE

	INITIALS	DATE
EXAMINED		
EXAMINED		
SAFETY		
ENGINEER		
CHECKED		
DESIGNED		
DRAWN		

APPROVED: 5/22/88 10:25

NAVAL AMMUNITION PRODUCTION ENGINEERING CENTER CRANE, IN 47522

DEPARTMENT OF THE NAVY NAVAL SEA SYSTEMS COMMAND WASHINGTON, DC 20362

UNIVERSAL SECURITY SYSTEM INSTALLATION PROCEDURE FOR SLIDING DOOR; RIGHT-SIDE MOUNT

SIZE	CODE IDENT NO.	NAVSEA DWG NO.
F	53711	5532346

SHEET 3 OF 3

REVISIONS					
ZONE	LTR	DESCRIPTION	DATE	APPROVAL	
F2	A	CHANGED TANG	3/3/83		
	B	SEE NOR 5532346 B	8/4/83		

NAVSEA Drawing No. 5532346 SHEET 2 OF 3

NOTES
1. INTERPRET DRAWING IN ACCORDANCE WITH DOD STD 100.
2. REMOVE BURRS AND SHARP EDGES

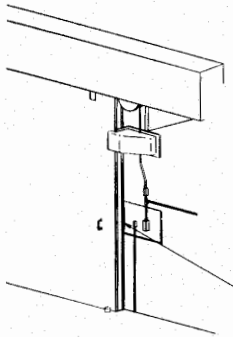

STEP 1
OPEN AND CLOSE MAGAZINE DOOR SEVERAL TIMES NOTING POSITION OF DOOR EACH TIME IT STOPS IN CLOSED POSITION. MARK THIS POSITION ON HEADWALL. REMOVE ANY OBSTRUCTIONS FROM MAGAZINE HEADWALL IN AREA APPROXIMATELY 2' RIGHT OF DOOR (IN CLOSED POSITION) AND AT A HEIGHT 3' TO 5' ABOVE MAGAZINE APRON.

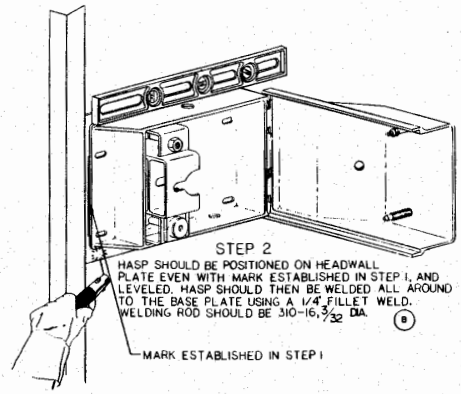

STEP 2
HASP SHOULD BE POSITIONED ON HEADWALL PLATE EVEN WITH MARK ESTABLISHED IN STEP 1, AND LEVELED. HASP SHOULD THEN BE WELDED ALL AROUND TO THE BASE PLATE USING A 1/4" FILLET WELD. WELDING ROD SHOULD BE 310-16, 3/32 DIA. (B)

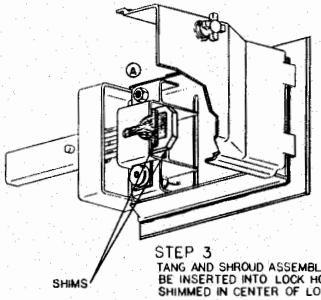

STEP 3
TANG AND SHROUD ASSEMBLY SHOULD THEN BE INSERTED INTO LOCK HOUSING AND TANG SHIMMED IN CENTER OF LOCK HOUSING.

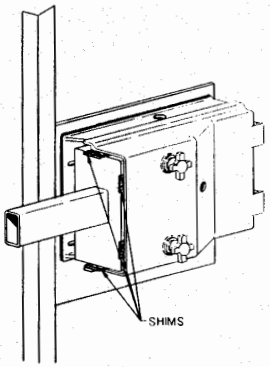

STEP 4
CLOSE COVER AND FASTEN SECURELY USING TWO JACKSCREWS. INSERT WOODEN SHIM BETWEEN SHROUD AND COVER AS SHOWN TO CENTER SHROUD ASSEMBLY.

STEP 5
CLOSE DOOR UNTIL SLIDE TUBE TOUCHES DOOR END. MARK AROUND TANG AS SHOWN.

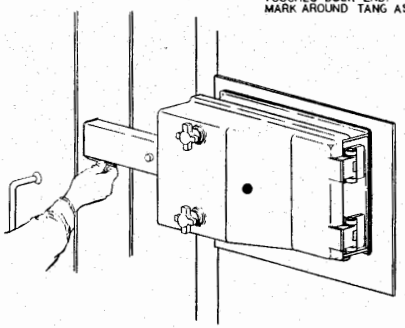

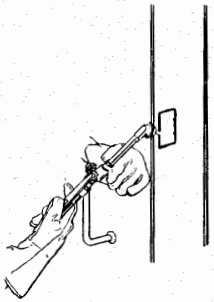

STEP 6
OPEN DOOR AND CUT OUT MARKED PANEL.

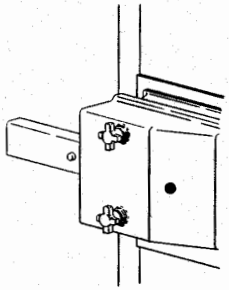

FIND NO.	QTY REQ	CODE IDENT	PART, DRAWING OR SPEC NO.	NOMENCLATURE/DESCRIPTION	REMARKS

PARTS LIST

NEXT ASSY	USED ON		
APPLICATION			

SYMBOLS: (1) ITEM; (2) WELD ITEM; (3) ITEM CALLOUT; (4) WELD ITEM CALLOUT

DO NOT SCALE DRAWING
UNLESS OTHERWISE SPECIFIED DIMENSIONS ARE IN INCHES
TOLERANCES:
XX DECIMALS ±
XXX DECIMALS ±
FRACTIONS ±
ANGLES ±

SCALE NONE

	INITIALS	DATE
EXAMINED		
EXAMINED		
SAFETY		
ENGINEER		
CHECKED		
DESIGNED		

APPROVED NAVSEA 5, 19 83

NAVAL AMMUNITION PRODUCTION ENGINEERING CENTER
CRANE, IN 47522

DEPARTMENT OF THE NAVY
NAVAL SEA SYSTEMS COMMAND
WASHINGTON, DC 20362

UNIVERSAL SECURITY SYSTEM
INSTALLATION PROCEDURE FOR
SLIDING DOOR; RIGHT-SIDE MOUNT

SIZE F | CODE IDENT NO. 63711 | NAVSEA DWG NO. 5532346 | SHEET 2 OF 3

REVISIONS					
ZONE	LTR	DESCRIPTION	DATE	APPROVAL	
F7		CHANGED TANG			
F4	A	CHANGED TANG and LOCK			

NAVSEA DWG NO. 5532346 SHEET 3 OF 3

NOTES
1. INTERPRET DRAWING IN ACCORDANCE WITH DOD STD-100.
2. REMOVE BURRS AND SHARP EDGES

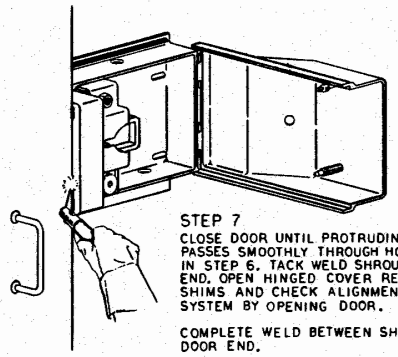

STEP 7
CLOSE DOOR UNTIL PROTRUDING TUBE PASSES SMOOTHLY THROUGH HOLE CUT IN STEP 6. TACK WELD SHROUD TO DOOR END. OPEN HINGED COVER RELEASING SHIMS AND CHECK ALIGNMENT OF SYSTEM BY OPENING DOOR.

COMPLETE WELD BETWEEN SHROUD AND DOOR END.

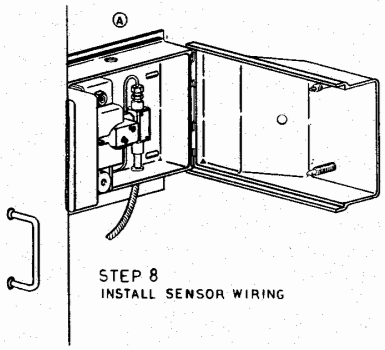

STEP 8
INSTALL SENSOR WIRING

FIND NO.	QTY REQ	CODE IDENT	PART, DRAWING OR SPEC NO.	NOMENCLATURE/DESCRIPTION	REMARKS

PARTS LIST

NEXT ASSY	USED ON
APPLICATION	

SYMBOLS: ITEM; WELD ITEM; ITEM CALLOUT; WELD ITEM CALLOUT

DO NOT SCALE DRAWING
UNLESS OTHERWISE SPECIFIED, DIMENSIONS ARE IN INCHES
TOLERANCES
XX DECIMALS ±
XXX DECIMALS ±
FRACTIONS ±
ANGLES ±

	INITIALS	DATE
EXAMINED		
EXAMINED		
SAFETY		
ENGINEER		
CHECKED		
DESIGNED		

SCALE NONE

APPROVED Lt. B. 18 83

NAVAL AMMUNITION PRODUCTION ENGINEERING CENTER CRANE, IN 47522

DEPARTMENT OF THE NAVY NAVAL SEA SYSTEMS COMMAND WASHINGTON, DC 20362

UNIVERSAL SECURITY SYSTEM
INSTALLATION PROCEDURE FOR
SLIDING DOOR; RIGHT-SIDE MOUNT

SIZE F | CODE IDENT NO. 53711 | NAVSEA DWG NO. 5532346

SHEET 3 OF 3

REVISION STATUS OF SHEETS			
SHEET NO.	1	2	3
REVISION	A	B	A

REVISIONS						
ZONE	LTR	DESCRIPTION	DATE	APPROVAL		
C4	A	CHANGED TANG				

SHEET 1 OF 3

NOTES

1. INTERPRET DRAWING IN accordance WITH DOD-STD-100.
2. REMOVE BURRS AND SHARP EDGES
3. S&G MODEL 831B OR NAPEC STYLE 3 DUAL CONTROL LOCK MAY BE USED TO SECURE THE UNIVERSAL SECURITY SYSTEM.

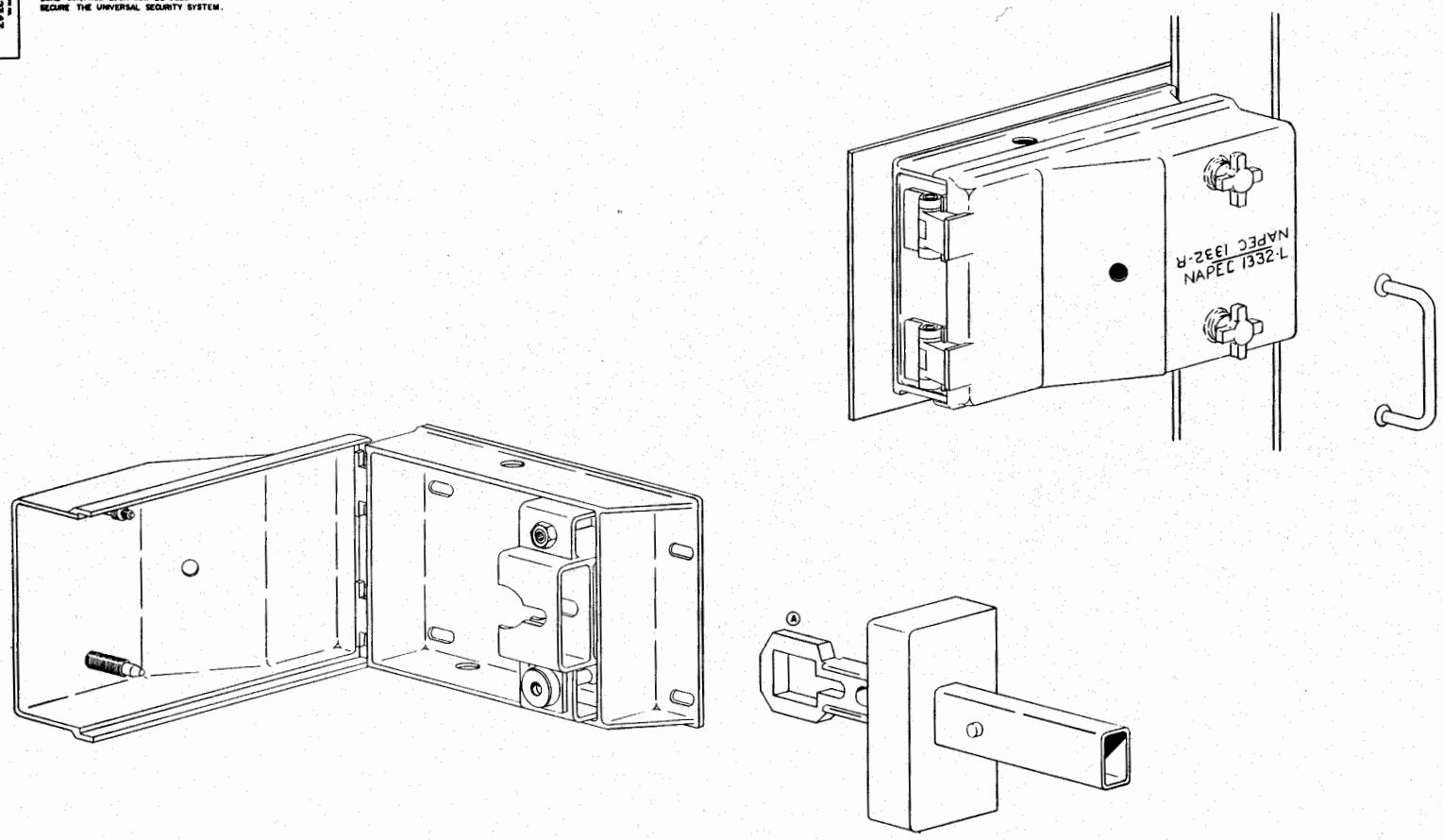

FIND NO.	QTY REQ	CODE IDENT	PART, DRAWING OR SPEC NO.	NOMENCLATURE/DESCRIPTION	REMARKS

PARTS LIST

NEXT ASSY	USED ON
APPLICATION	

SYMBOLS: ITEM; WELD ITEM; ITEM CALLOUT; WELD ITEM CALLOUT

DO NOT SCALE DRAWING. UNLESS OTHERWISE SPECIFIED, DIMENSIONS ARE IN INCHES. TOLERANCES: XX DECIMALS ±; XXX DECIMALS ±; FRACTIONS ±; ANGLES ±

	INITIALS	DATE
EXAMINED		
EXAMINED		
SAFETY		
ENGINEER		
CHECKED		
DRAWN		

SCALE: NONE

APPROVED: MAR 8 19 83

NAVAL AMMUNITION PRODUCTION ENGINEERING CENTER, CRANE, IN 47522

DEPARTMENT OF THE NAVY, NAVAL SEA SYSTEMS COMMAND, WASHINGTON, DC 20362

UNIVERSAL SECURITY SYSTEM INSTALLATION PROCEDURE FOR SLIDING DOOR; LEFT-SIDE MOUNT

SIZE: F | CODE IDENT NO. 53711 | NAVSEA | DWG NO. 5532347

SHEET 1 OF 3

NAVSEA 5532347 SHEET 2 OF 3

NOTES
1. INTERPRET DRAWING IN ACCORDANCE WITH DOD STD 100
2. REMOVE BURRS AND SHARP EDGES

ZONE	LTR	REVISIONS DESCRIPTION	DATE	D C A APPROVAL
C6	A	CHANGED TANG	[illegible]	[illegible]
	B	SEE NOR 5532347 B	[illegible]	[illegible]

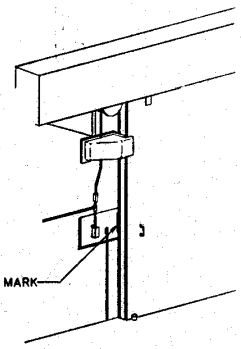

STEP 1
OPEN AND CLOSE MAGAZINE DOOR SEVERAL TIMES NOTING THE POSITION OF THE DOOR EACH TIME IT STOPS IN THE CLOSED POSITION. MARK THIS POSITION ON THE HEADWALL. REMOVE ANY OBSTRUCTIONS FROM THE MAGAZINE HEADWALL IN AREA APPROXIMATELY 2' LEFT OF THE DOOR (IN CLOSED POSITION) AND AT A HEIGHT 3' TO 5' ABOVE THE MAGAZINE OR APRON.

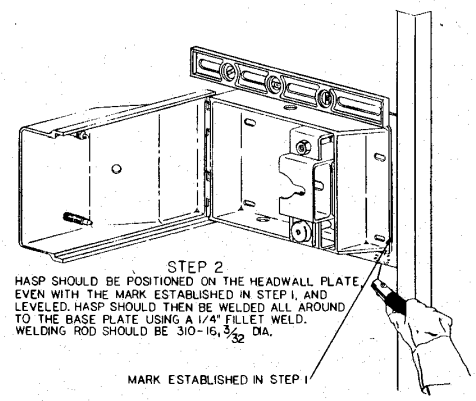

STEP 2
HASP SHOULD BE POSITIONED ON THE HEADWALL PLATE EVEN WITH THE MARK ESTABLISHED IN STEP 1, AND LEVELED. HASP SHOULD THEN BE WELDED ALL AROUND TO THE BASE PLATE USING A 1/4" FILLET WELD. WELDING ROD SHOULD BE 310-16, 3/32 DIA.

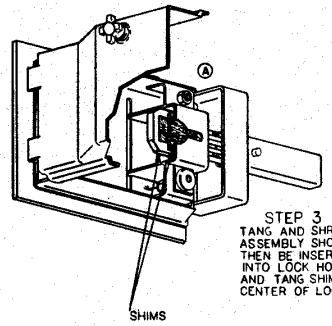

STEP 3
TANG AND SHROUD ASSEMBLY SHOULD THEN BE INSERTED INTO LOCK HOUSING AND TANG SHIMMED IN CENTER OF LOCK HOUSING.

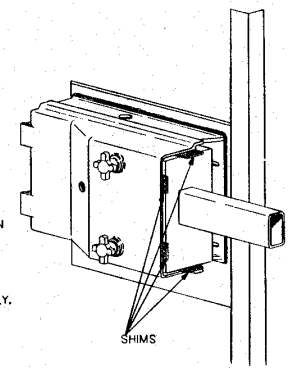

STEP 4
CLOSE COVER AND FASTEN SECURELY USING TWO JACKSCREWS.
INSERT WOODEN SHIM BETWEEN SHROUD AND COVER AS SHOWN TO CENTER SHROUD ASSEMBLY.

FIND NO.	QTY REQ	CODE IDENT	PART, DRAWING OR SPEC NO.	NOMENCLATURE/DESCRIPTION	REMARKS

PARTS LIST

NEXT ASSY	USED ON
APPLICATION	

SYMBOLS: ITEM; WELD ITEM; ITEM CALLOUT; WELD ITEM CALLOUT

DO NOT SCALE DRAWING
UNLESS OTHERWISE SPECIFIED, DIMENSIONS ARE IN INCHES
TOLERANCES:
XX DECIMALS ±
XXX DECIMALS ±
FRACTIONS ±
ANGLES ±

SCALE: NONE

	INITIALS	DATE
EXAMINED		
EXAMINED		
SAFETY		
FOREMAN		
CHECKED		
DRAWN		

APPROVED [illegible]

NAVAL AMMUNITION PRODUCTION ENGINEERING CENTER, CRANE, IN 47522

DEPARTMENT OF THE NAVY NAVAL SEA SYSTEMS COMMAND WASHINGTON, DC 20362

UNIVERSAL SECURITY SYSTEM INSTALLATION PROCEDURE FOR SLIDING DOOR; LEFT-SIDE MOUNT

SIZE F | CODE IDENT NO. 53711 | NAVSEA DWG NO. 5532347 | SHEET 2 OF 3

REVISIONS					
ZONE	LTR	DESCRIPTION	DATE	D	C	B
C8		CHANGED TANG				
C2	A	CHANGED TANG & LOCK	1-23-79			

NAVSEA 5532347 SHEET 3 OF 3

NOTES
1. INTERPRET DRAWING IN ACCORDANCE WITH DOD STD 100.
2. REMOVE BURRS AND SHARP EDGES

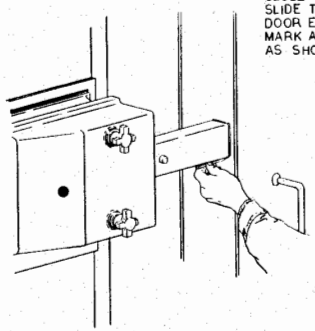

STEP 5
CLOSE DOOR UNTIL SLIDE TUBE TOUCHES DOOR END. MARK AROUND TANG AS SHOWN.

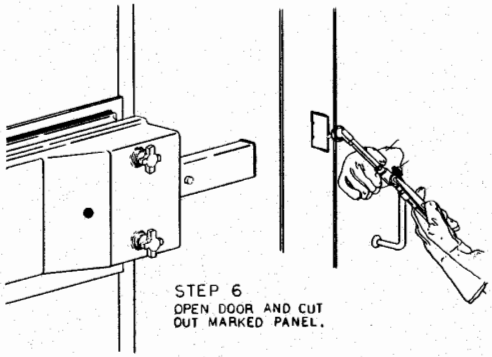

STEP 6
OPEN DOOR AND CUT OUT MARKED PANEL.

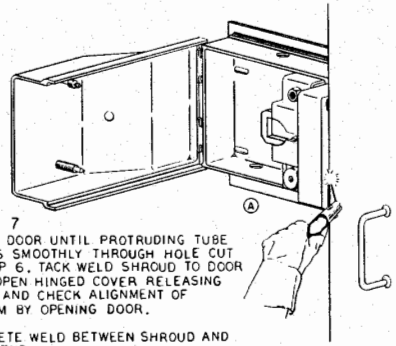

STEP 7
CLOSE DOOR UNTIL PROTRUDING TUBE PASSES SMOOTHLY THROUGH HOLE CUT IN STEP 6. TACK WELD SHROUD TO DOOR END. OPEN HINGED COVER RELEASING SHIMS AND CHECK ALIGNMENT OF SYSTEM BY OPENING DOOR.

COMPLETE WELD BETWEEN SHROUD AND DOOR END.

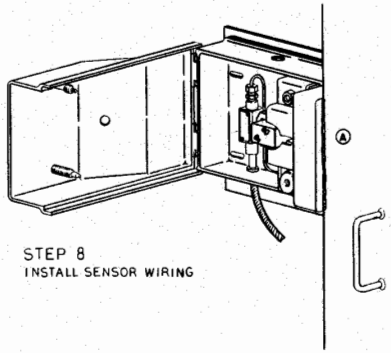

STEP 8
INSTALL SENSOR WIRING

FIND NO.	QTY REQ	CODE IDENT	PART DRAWING OR SPEC NO.	NOMENCLATURE/DESCRIPTION	REMARKS

PARTS LIST

NEXT ASSY	USED ON
APPLICATION	

SYMBOLS: ITEM; FIELD ITEM; ITEM CALLOUT; FIELD ITEM CALLOUT

DO NOT SCALE DRAWING
UNLESS OTHERWISE SPECIFIED DIMENSIONS ARE IN INCHES
TOLERANCES:
XX DECIMALS ±
XXX DECIMALS ±
FRACTIONS ±
ANGLES ±

SCALE NONE

	INITIALS	DATE
EXAMINED		
EXAMINED		
SAFETY		
ENGINEER		
CHECKED		
DESIGNED		

APPROVED 1-23-79 19 B.S.

NAVAL AMMUNITION PRODUCTION ENGINEERING CENTER
CRANE, IN 47522

DEPARTMENT OF THE NAVY
NAVAL SEA SYSTEMS COMMAND
WASHINGTON, DC 20362

UNIVERSAL SECURITY SYSTEM
INSTALLATION PROCEDURE FOR
SLIDING DOOR; LEFT-SIDE MOUNT

SIZE	CODE IDENT NO.	NAVSEA	DWG NO.
F	53711		5532347

SHEET 3 OF 3

NOTICE: THE CONTENTS AND DESIGN DETAILS OF THIS DRAWING WERE DEVELOPED BY THE NAVAL AMMUNITION PRODUCTION ENGINEERING CENTER AND ARE UNITED STATES GOVERNMENT PROPERTY

NAPEC 1369 SHEET 1 OF 1

NOTES
1. INTERPRET DRAWING IN ACCORDANCE WITH DOD-STD-100.
2. REMOVE BURRS AND SHARP EDGES

(1) OF NAPEC DWG NO: 1369
NAME: ANTI-ROTATION BLOCK
MATL: INVESTMENT CASTING STAINLESS STEEL 304L (CF-3)
SURF REQT: NAS-823/C-25
SPCL NOTE: ALL RADII 1/32 EXCEPT AS NOTED
SCALE: 1/1

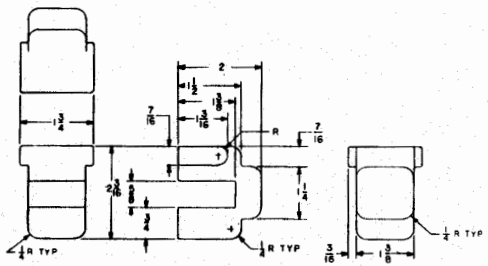

(2) OF NAPEC DWG NO: 1369
NAME: INSTALLATION JIG
MATL: POLYETHELENE 1.7 TO 2 LB/FT³ DENSITY
SPCL NOTE: HOT WIRE CUT PERMISSIBLE. ALL TOLERANCES +1/32, -0.
SCALE: 1/1

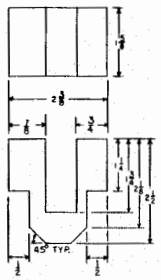

REVISIONS					
ZONE	LTR	DESCRIPTION	DATE	APPROVAL	

NOTE: ONE SET CONSISTS OF 2 EACH PARTS 1369-1 AND 1369-2

FIND NO.	QTY REQ	CODE IDENT	PART, DRAWING OR SPEC NO.	NOMENCLATURE/DESCRIPTION	REMARKS

PARTS LIST

NEXT ASSY	USED ON
5532335	
5532334	
0908	
0957	

APPLICATION

SYMBOLS: (1) TRIM; (2) WELD TRIM; (3) ITEM CALLOUT; (4) WELD TRIM CALLOUT

DO NOT SCALE DRAWING
UNLESS OTHERWISE SPECIFIED, DIMENSIONS ARE IN INCHES.
TOLERANCES
XX DECIMALS ±
XXX DECIMALS ±
FRACTIONS ± 1/64
ANGLES ±

SCALE 1/1

	INITIALS	DATE
EXAMINED		
EXAMINED		
SAFETY		
ENGINEER		
CHECKED		
DESIGNED BY		

APPROVED 1 / 8 19 81

NAVAL AMMUNITION PRODUCTION ENGINEERING CENTER GRANT, IN 47832
DEPARTMENT OF THE NAVY NAVAL SEA SYSTEMS COMMAND WASHINGTON, DC 20362

ANTI-ROTATION BLOCK
FOR HIGH SECURITY HASP

SIZE F | CODE IDENT NO. 53711 | NAVAMPROENGCEN DWG NO. 5532350

SHEET (OF 1